**REPORT TO PLANNING COMMISSION**

**To:** Honorable Chair and Members of the Planning Commission

**From:** Damaris Abraham, Interim Assistant Community Development Director

**Prepared by:** Kevin Beery, Associate Planner

**Date:** December 6, 2022

**Subject:** **Planning Application No. 2021-39 (Dutch Bros)** – A request for approval of a Commercial Design Review to construct a one-story, 950 square-foot drive-through coffee stand and related site improvements in conjunction with a Conditional Use Permit to allow operation of the drive-through located at 32250 Mission Trail.

**Applicant Name:** Dutch Bros., LLC

## Recommendation

1. Adopt A RESOLUTION OF THE PLANNING COMMISSION OF THE CITY OF LAKE ELSINORE, CALIFORNIA, APPROVING CONDITIONAL USE PERMIT NO. 2021-15 TO ESTABLISH A 950 SQUARE-FOOT DRIVE-THROUGH COFFEE STAND LOCATED AT 32250 MISSION TRAIL (APN: 365-040-024); and,

2. Adopt A RESOLUTION OF THE PLANNING COMMISSION OF THE CITY OF LAKE ELSINORE, CALIFORNIA, APPROVING COMMERCIAL DESIGN REVIEW NO. 2021-19 PROVIDING BUILDING DESIGN AND RELATED IMPROVEMENTS FOR A 950 SQUARE-FOOT DRIVE-THROUGH COFFEE STAND LOCATED AT 32250 MISSION TRAIL (APN: 365-040-024); and,

3. Find and determine that the project is exempt from the California Environmental Quality Act (CEQA) pursuant to CEQA Guidelines Section 15303 (New Construction)

## Project Location

The project site consists of one approximately 9.07-acre parcel located at 32250 Mission Trail (APN: 365-040-024). The project site is currently developed with an approximately 88,057 sq. ft. bowling and amusement center (“Pins N Pockets”) and accessory site improvements including paved parking areas and landscaping. The new building and improvements would be developed on an approximately 0.68-acre portion in the southwest of the site.

## Project Description

Planning Application No. 2021-39 is a request for approval of a Commercial Design Review (CDR No. 2021-19) to construct a one-story, 950 sq. ft. drive-through coffee stand and related site improvements including a two-lane drive-through with 22 queuing spaces, eight parking spaces and new landscaping. The application also includes a request for approval of a Conditional Use Permit (CUP No. 2021-15) to permit operation of the drive-through, as required by the CMU zoning regulations. Access to the new development would be provided by two existing driveways on Mission Trail. The northern driveway is unsignalized and provides right-in and right-out access while the southern driveway is signalized and provides full access.

The drive-through ordering area would not contain speaker systems and all customer orders would be taken by employees in the drive-through queue. The proposed coffee stand will also feature a walk-up ordering window facing the parking area for pedestrian use. No indoor customer access is proposed. Business hours of operation would be 5:30 AM to 10:00 PM on Sunday through Thursday and 5:30 AM to 11:00 PM Friday through Saturday. The expected maximum number of onsite employees would be six at any given time.

## Environmental Setting

| | EXISTING LAND USE | GENERAL PLAN | ZONING |
|---|---|---|---|
| Project Site | Bowling Alley | Commercial Mixed Use (CMU) | Commercial Mixed Use (CMU) |
| North | Commercial | Commercial Mixed Use (CMU) | Commercial Mixed Use (CMU) |
| South | Commercial | Commercial Mixed Use (CMU) | Commercial Mixed Use (CMU) |
| East | Vacant | General Commercial (GC) | General Commercial (C-2) |
| West | Commercial | Commercial Mixed Use (CMU) | Commercial Mixed Use (CMU) |

## Analysis

### General Plan Consistency

The subject site has a General Plan land use designation of Commercial Mixed Use (CMU) and is located in the Lake Elsinore Hills District. The CMU designation provides for a mix of residential and non-residential uses within a single proposed development area, with an emphasis on retail, service, civic and professional office uses with a maximum 0.80 floor area ratio (FAR). The proposed FAR, including the existing amusement center and proposed coffee stand buildings, is 0.22. Therefore, the Project is consistent with the General Plan.

### Municipal Code Consistency

The current zoning designation of the subject site is Commercial Mixed Use (CMU). According to Section 17.134.020 of the Lake Elsinore Municipal Code (LEMC), drive-through food establishments are permitted subject to approval of a Conditional Use Permit in the CMU zone.

Staff has reviewed the submitted development plans for compliance with the CMU development standards and regulations of Chapter 17.134 of the LEMC and has determined that the proposed development conforms to the CMU district provisions as shown in Table 2.

| Development Standard | Required | Proposed |
|---|---|---|
| Floor Area Ratio (FAR) | 0.80 max. | 0.22 |
| Front Setback | 10'-0" min. | 35'-6" |
| Right Side, Interior | None | 103'-0" |
| Left Side, Interior | None | 550'-0" (approx.) |
| Building Height | Varied Rooflines | 24'-0" to top of parapet |
| Drive Through Stacking | 8 vehicles (160'-0") min. | 22 vehicles (440'-0") |
| Landscape improvements: | | |
| Drive-through planter separation (from driveways, parking and property lines) | 5'-0" min. | 12'-6 ½" to 30'-6" |
| Parking area from ROW | 20'-0" min. | 71'-6 ½" |

**Table 2:** Development Standards

The Project also meets the minimum parking requirements set forth in Section 17.148.030 of the LEMC as shown in Table 3.

| Parking Standard | Required | Proposed |
|---|---|---|
| • Bowling alleys: four spaces per lane<br>• Commercial uses: one space per 250 square feet of gross floor area | Pins N Pockets: 24 lanes x 4 spaces = 96 spaces<br>Dutch Bros: 950 sq. ft. / 250 sq. ft. = 4 spaces<br>**Total = 100 spaces** | **Existing + New = 265 + 8**<br><br>**Total = 273** |

**Table 3:** Parking Requirements

The architectural design of the proposed building complies with the Nonresidential Development Standards (Chapter 17.112) of the LEMC. The proposed building is rectangular in plan and will feature a flat roof with a parapet capped with flashing (painted to match). The main body of the building exterior would consist of dark and light gray metal panel siding, stone veneer wainscoting, metal awning projections, and space for tenant wall signage. Accent blue metal siding would be provided on the proposed tower element. The exterior architecture, including colors and materials, has been designed to be harmonious and compatible with surrounding development. Furthermore, the proposed landscaping improvements complement the proposed building design, provide shade and break-up expanses of pavement. The proposed site design is cohesive and functional for the proposed use.

The Design Review Committee, including Staff from Planning, Building and Safety, Fire, and Engineering departments and the Elsinore Valley Municipal Water District, has reviewed the Project and have added recommended permit conditions of approval to ensure compliance with adopted plans, policies, and regulations.

Traffic

A focused traffic analysis dated July 21, 2022 was prepared by Transolutions, Inc. for the Project. The purpose of the focused traffic analysis is to assess the degree to which the Project would impact performance of the surrounding road network, specifically the existing intersections of the Project site driveways and Mission Trail. The analysis concluded that the Project would not

adversely affect levels of service in the study area and that the study intersections would continue operating at satisfactory levels of service. Additionally, based on survey data of the applicant's other operational locations in the region, the study determined that the proposed drive-through stacking capacity of 22 vehicles is sufficient to accommodate peak queue length. Therefore, the Project is consistent with the circulation goals and policies of the General Plan and is not expected to adversely impact the safety or efficiency of the surrounding roadways.

**MSHCP Consistency**

The proposed development is subject to discretionary approvals by the City of Lake Elsinore and is therefore a project under the Western Riverside County Multiple Species Habitate Conservation Plan (MSHCP). As a permittee of the MSHCP, the City must make MSHCP Consistency findings prior to approving a project. The project site is not located within a Criteria Cell and therefore is exempt from the requirement to undergo Lake Elsinore Acquisition Process (LEAP) and Joint Project Review (JPR) procedures. The Project site is void of riparian, riverine, vernal pools or other wetland features, and has been previously disturbed and graded for existing commercial use. Furthermore, the Project site is not located within a special species survey area in accordance with the MSHCP. Therefore, the Project is consistent with the MSHCP guidelines concerning Riparian/Riverine Areas and Vernal Pools, Protection of Narrow Endemic Plant Species, Additional Survey Needs and Procedures, Urban/Wildlands Interface and Fuel Management in addition to the Vegetation Mapping Requirements. Standard permit conditions have been added requiring the applicant to pay the MSHCP Local Development Mitigation Fee. For these reasons, the Project is consistent with the MSHCP.

**Environmental Determination**

Planning Division Staff has determined that the Project is exempt from the California Environmental Quality Act (Cal. Pub. Res. Code §§21000 et seq.: "CEQA") and the CEQA Guidelines (14 C.C.R. §§ 15000 et seq.) pursuant to CEQA Guidelines Section 15303 (New Construction) because the project involves the new construction of one 950 square-foot commercial structure and accessory onsite improvements including a drive-through lane, a parking area, landscaping, and utility extensions to serve the new construction.

**Attachments**

A – CUP Resolution
B – CDR Resolution
C – Conditions of Approval
D – Vicinity Map
E – Aerial Map
F – Design Review Package

**RESOLUTION NO. 2022-**

**A RESOLUTION OF THE PLANNING COMMISSION OF THE CITY OF LAKE ELSINORE, CALIFORNIA, APPROVING CONDITIONAL USE PERMIT NO. 2021-15 TO ESTABLISH A 950 SQUARE-FOOT DRIVE-THROUGH COFFEE STAND AT 32250 MISSION TRAIL (APN: 365-040-024)**

**Whereas**, Dutch Bros., LLC has filed an application with the City of Lake Elsinore (City) requesting approval of Planning Application No. 2021-39 (Conditional Use Permit No. 2021-15 and Commercial Design Review No. 2021-19) to construct and operate a one-story, 950 sq. ft. drive-through coffee stand and related site improvements including a two-lane drive-through with 22 queuing spaces, eight parking spaces and new landscaping on an approximately 0.68 acre portion of an approximately 9.07-acre site in the Commercial Mixed Use zone. The project site is located at 32250 Mission Trail (APN: 365-040-024); and

**Whereas**, Section 6.0 of the Western Riverside County Multiple Species Habitat Conservation Plan (MSHCP) requires that all discretionary projects within a MSHCP Criteria Cell undergo the Lake Elsinore Acquisition Process (LEAP) and Joint Project Review (JPR) process to analyze the scope of the proposed development and establish a building envelope that is consistent with the MSHCP criteria; and,

**Whereas**, Section 6.0 of the MSHCP further requires that the City adopt consistency findings demonstrating that the proposed discretionary entitlement complies with the MSHCP Criteria Cell, and the MSHCP goals and objectives; and,

**Whereas**, Section 17.415.070.A of the Lake Elsinore Municipal Code (LEMC) provides that certain uses have operational characteristics that, depending on the location and design of the use, may have the potential to negatively impact adjoining properties, businesses or residents and therefore are permitted subject to the issuance of a Conditional Use Permit, which allows the City to comprehensively review and approve the use; and,

**Whereas**, pursuant to Section 17.415.070.B of the LEMC, the Planning Commission (Commission) has the responsibility of reviewing and approving, conditionally approving, or denying Conditional Use Permits; and,

**Whereas**, on December 6, 2022, at a duly noticed Public Hearing, the Commission has considered evidence presented by the Community Development Department and other interested parties with respect to this item.

**NOW, THEREFORE**, **THE PLANNING COMMISSION OF THE CITY OF LAKE ELSINORE, CALIFORNIA, DOES HEREBY RESOLVE, DETERMINE AND ORDER AS FOLLOWS:**

**Section 1:** The Commission has considered the project and its consistency with the MSHCP prior to adopting Findings of Consistency with the MSHCP.

**Section 2:** That in accordance with the MSHCP, the Commission makes the following findings for MSHCP consistency:

1. *The project is not subject to the City's LEAP and the Western Riverside County Regional Conservation Authority's (RCA) JPR processes as it is not located within a Criteria Cell.*

2. *The Project site has been previously completely disturbed and graded for the development of the existing commercial uses. The project is proposing to construct a new coffee stand building, drive-through lanes, and other improvements in the southwest portion of the Project site. As such, the Riparian/Riverine Areas and Vernal Pool Guidelines as set forth in Section 6.1.2 of the MSHCP are not applicable.*

3. *The project is consistent with the Protection of Narrow Endemic Plant Species Guidelines as set forth in MSHCP Section 6.1.3 and the Additional Survey Needs and Procedures as set forth in MSHCP Section 6.3.2 because the project is not located within any Narrow Endemic Plant Species Survey Areas or Critical Species Survey Areas.*

4. *The project is consistent with the Fuels Management Guidelines because the project site is not within or adjacent to any MSHCP Criteria Cell or conservation areas.*

5. *The project has been conditioned to pay any applicable MSHCP Local Development Mitigation fees.*

**Section 3:** The Commission finds that the proposed project is exempt from the California Environmental Quality Act (Cal. Pub. Res. Code §§21000 et seq.: "CEQA") and the CEQA Guidelines (14 C.C.R. §§ 15000 et seq.) pursuant to CEQA Guidelines Section 15303 (New Construction) because the project involves the new construction of one 950 square-foot commercial structure and accessory onsite improvements including a drive-through lane, a parking area, landscaping, and utility extensions to serve the new construction.

**Section 4:** That in accordance with LEMC Section 17.415.070.C. Findings, the Commission makes the following findings regarding Conditional Use Permit No. 2021-15:

1. That the proposed use is in accord with the objectives of the General Plan and the purpose of the planning district in which the site is located.

   *The subject site has a General Plan Land Use designation of Commercial Mixed Use (CMU) and is located in the Lake Elsinore Hills District. The CMU Land Use designation provides for a mix of residential and non-residential uses within a single proposed development area, with an emphasis on retail, service, civic and professional office uses with a maximum 0.80 floor area ratio (FAR). The proposed FAR, including the existing amusement center and proposed coffee stand buildings, is 0.22. Therefore, the Project is consistent with the General Plan.*

   *Furthermore, the current zoning designation of the subject site is Commercial Mixed Use (CMU). According to Section 17.134.020 of the Lake Elsinore Municipal Code (LEMC), drive-through food establishments are permitted subject to approval of a Conditional Use Permit in the CMU zone.*

   *Therefore, the proposed drive-through food establishment is consistent with the commercial designation of the subject site as described in the General Plan.*

2. The proposed use will not be detrimental to the general health, safety, comfort or general welfare of persons residing or working within the neighborhood of the proposed use or the City, or injurious to property or improvements in the neighborhood or the City.

*The proposed use does not involve the potential for causing detrimental effects to the existing surrounding community or the general public. The project has been conditioned as such to avoid any possible negative impacts associated with the proposed project.*

3. The site is adequate in size and shape to accommodate the use, and for all the yards, setbacks, walls or fences, landscaping, buffers and other features required by this title.

   *The proposed site development plan provides sufficient drive-through lane lengths to accommodate assumed peak vehicle queuing space, as well as provide conforming building and drive lane setbacks from the right-of-way and neighboring properties.*

4. The site for the proposed use relates to streets and highways with proper design both as to width and type of pavement to carry the type and quantity of traffic generated by the subject use.

   *A focused traffic analysis dated July 21, 2022 was prepared by Transolutions, Inc. for the Project. The purpose of the focused traffic analysis is to assess the degree to which the Project would impact performance of the surrounding road network, specifically the existing intersections of the project site driveways and Mission Trail. The analysis concluded that the Project would not adversely affect levels of service in the study area and that the study intersections would continue operating at satisfactory levels of service. Additionally, based on survey data of the applicant's other operational locations in the region, the study determined that the proposed drive-through stack capacity of 22 vehicles is sufficient to accommodate peak queue length. Therefore, the Project is consistent with the circulation goals and policies of the General Plan and is not expected to adversely impact the safety or efficiency of the surrounding roadways.*

5. In approving the subject use at the specific location, there will be no adverse effect on abutting properties or the permitted and normal use thereof.

   *The project has been thoroughly reviewed and conditioned by all applicable City departments thereby eliminating the potential for any adverse effects.*

6. Adequate conditions and safeguards pursuant to LEMC 17.415.070.B, including guarantees and evidence of compliance with conditions, have been incorporated into the approval of the subject project to ensure development of the property in accordance with the objectives of this chapter and the planning district in which the site is located.

   *Pursuant to Section 17.415.070.B of the LEMC, the project was considered by the Planning Commission at a duly noticed Public Hearing on December 6, 2022, appropriate and applicable conditions of approval have been included to protect the public health, safety and general welfare.*

**Section 5:** Based upon the evidence presented, both written and testimonial, and the above findings, the Commission hereby finds that the project is consistent with the MSHCP.

**Section 6:** Based upon the evidence presented, the above findings, and the Conditions of Approval imposed upon the project, the Commission hereby approves Conditional Use Permit No. 2021-15.

**Section 7:** This Resolution shall take effect immediately upon its adoption.

**Passed and Adopted** on this 6th day of December, 2022.

_____
Matthew Dobler, Chairman

**Attest:**

_____
Damaris Abraham,
Interim Assistant Community Development Director

STATE OF CALIFORNIA )
COUNTY OF RIVERSIDE ) ss.
CITY OF LAKE ELSINORE )

I, Damaris Abraham, Interim Assistant Community Development Director of the City of Lake Elsinore, California, hereby certify that Resolution No. 2022-__ was adopted by the Planning Commission of the City of Lake Elsinore, California, at a regular meeting held December 6, 2022 and that the same was adopted by the following vote:

AYES:
NOES:
ABSTAIN:
ABSENT:

_____
Damaris Abraham,
Interim Assistant Community Development Director

**RESOLUTION NO. 2022-**

**A RESOLUTION OF THE PLANNING COMMISSION OF THE CITY OF LAKE ELSINORE, CALIFORNIA, APPROVING COMMERCIAL DESIGN REVIEW NO. 2021-19 PROVIDING BUILDING DESIGN AND RELATED IMPROVEMENTS FOR A 950 SQUARE-FOOT DRIVE-THROUGH COFFEE STAND AT 32250 MISSION TRAIL (APN: 365-040-024)**

**Whereas**, Dutch Bros., LLC has filed an application with the City of Lake Elsinore (City) requesting approval of Planning Application No. 2021-39 (Conditional Use Permit No. 2021-15 and Commercial Design Review No. 2021-19) to construct and operate a one-story, 950 sq. ft. drive-through coffee stand and related site improvements including a two-lane drive-through with 22 queuing spaces, eight parking spaces and new landscaping on an approximately 0.68 acre portion of an approximately 9.07-acre site in the Commercial Mixed Use zone. The project site is located at 32250 Mission Trail (APN: 365-040-024); and

**Whereas**, Section 6.0 of the Western Riverside County Multiple Species Habitat Conservation Plan (MSHCP) requires that all discretionary projects within a MSHCP Criteria Cell undergo the Lake Elsinore Acquisition Process (LEAP) and Joint Project Review (JPR) process to analyze the scope of the proposed development and establish a building envelope that is consistent with the MSHCP criteria; and,

**Whereas**, Section 6.0 of the MSHCP further requires that the City adopt consistency findings demonstrating that the proposed discretionary entitlement complies with the MSHCP Criteria Cell, and the MSHCP goals and objectives; and,

**Whereas**, pursuant to Section 17.415.050 (Major Design Review) of the Lake Elsinore Municipal Code (LEMC), the Planning Commission (Commission) has the responsibility of reviewing and approving, conditionally approving, or denying design review applications; and,

**Whereas**, on December 6, 2022, at a duly noticed Public Hearing, the Commission has considered evidence presented by the Community Development Department and other interested parties with respect to this item.

**NOW, THEREFORE, THE PLANNING COMMISSION OF THE CITY OF LAKE ELSINORE DOES HEREBY RESOLVE, DETERMINE AND ORDER AS FOLLOWS:**

**Section 1:** The Commission has reviewed and analyzed the proposed project pursuant to the California Planning and Zoning Laws (Cal. Gov. Code §§ 59000 et seq.), the Lake Elsinore General Plan (GP), and the LEMC and finds and determines that the proposed project is consistent with the requirements of California Planning and Zoning Law and with the goals and policies of the GP and the LEMC.

**Section 2:** That in accordance with the MSHCP, the Commission makes the following findings for MSHCP consistency:

1. *The project is not subject to the City's LEAP and the Western Riverside County Regional Conservation Authority's (RCA) JPR processes as it is not located within a Criteria Cell.*

2. *The Project site has been previously completely disturbed and graded for the development of the existing commercial uses. The project is proposing to construct a new coffee stand*

*building, drive-through lanes, and other improvements in the southwest portion of the Project site. As such, the Riparian/Riverine Areas and Vernal Pool Guidelines as set forth in Section 6.1.2 of the MSHCP are not applicable.*

3. *The project is consistent with the Protection of Narrow Endemic Plant Species Guidelines as set forth in MSHCP Section 6.1.3 and the Additional Survey Needs and Procedures as set forth in MSHCP Section 6.3.2 because the project is not located within any Narrow Endemic Plant Species Survey Areas or Critical Species Survey Areas.*

4. *The project is consistent with the Fuels Management Guidelines because the project site is not within or adjacent to any MSHCP Criteria Cell or conservation areas.*

5. *The project has been conditioned to pay any applicable MSHCP Local Development Mitigation fees.*

**Section 3:** The Commission finds that the proposed project is exempt from the California Environmental Quality Act (Cal. Pub. Res. Code §§21000 et seq.: "CEQA") and the CEQA Guidelines (14 C.C.R. §§ 15000 et seq.) pursuant to CEQA Guidelines Section 15303 New Construction because the project involves the new construction of one 950 square-foot commercial structure and accessory onsite improvements including a drive-through lane, a parking area, landscaping, and utility extensions to serve the new construction.

**Section 4:** That in accordance with Section 17.415.050.G of the LEMC, the Commission makes the following findings regarding Commercial Design Review No. 2021-19:

1. The Project, as approved, will comply with the goals and objectives of the General Plan and the zoning district in which the project is located.

   *The subject site has a General Plan Land Use designation of Commercial Mixed Use (CMU) and is located in the Lake Elsinore Hills District. The CMU Land Use designation provides for a mix of residential and non-residential uses within a single proposed development area, with an emphasis on retail, service, civic and professional office uses with a maximum 0.80 floor area ratio (FAR). The proposed FAR, including the existing amusement center and proposed coffee stand buildings, is 0.22. Therefore, the Project is consistent with the General Plan.*

   *Furthermore, the current zoning designation of the subject site is Commercial Mixed Use (CMU). According to Section 17.134.020 of the Lake Elsinore Municipal Code (LEMC), drive-through food establishments are permitted subject to approval of a Conditional Use Permit in the CMU zone.*

   *Therefore, the proposed drive-through food establishment is consistent with the commercial designation of the subject site as described in the General Plan. The proposed commercial project will assist in achieving the development of a well-balanced and functional mix of residential, commercial, industrial, open space, recreational and institutional land uses.*

2. The Project complies with the design directives contained in the LEMC and all applicable provisions of the LEMC.

*The project is appropriate to the site and surrounding developments. The architectural design of the proposed building conforms to the Nonresidential Development Standards (Chapter 17.112) of the LEMC. The architecture has been designed to achieve harmony and compatibility with the surrounding area. The colors and materials proposed will assist in blending the architecture into the existing landscape and are compatible with other colors and materials used on other properties near the project site. In addition, safe and efficient circulation has been achieved onsite.*

3. Conditions and safeguards pursuant to Section 17.415.050.G.3 of the LEMC, including guarantees and evidence of compliance with conditions, have been incorporated into the approval of the Project to ensure development of the property in accordance with the objectives of Section 17.415.050.

   *Pursuant to Section 17.415.050.E of the LEMC, the project was considered by the Planning Commission at a duly noticed Public Hearing held on December 6, 2022. The project, as reviewed and conditioned by all applicable City divisions, departments and agencies, will not have a significant effect on the environment.*

**Section 5:** Based upon the evidence presented, both written and testimonial, and the above findings, the Commission hereby finds that the project is consistent with the MSHCP.

**Section 6:** Based upon the evidence presented, the above findings, and the Conditions of Approval imposed upon the project, the Commission hereby approves Commercial Design Review No. 2021-19.

**Section 7:** This Resolution shall take effect immediately upon its adoption.

**Passed and Adopted** on this 6th day of December, 2022.

_____
Matthew Dobler, Chairman

**Attest:**

_____
Damaris Abraham,
Interim Assistant Community Development Director

STATE OF CALIFORNIA )
COUNTY OF RIVERSIDE ) ss.
CITY OF LAKE ELSINORE )

I, Damaris Abraham, Interim Assistant Community Development Director of the City of Lake Elsinore, California, hereby certify that Resolution No. 2022-__ was adopted by the Planning

Commission of the City of Lake Elsinore, California, at a regular meeting held December 6, 2022 and that the same was adopted by the following vote:

AYES:
NOES:
ABSTAIN:
ABSENT:

_____
Damaris Abraham,
Interim Assistant Community Development Director

## CONDITIONS OF APPROVAL

**PROJECT:** PA 2020-39/CUP 2021-15/CDR 2021-19
**PROJECT NAME:** Dutch Bros
**PROJECT LOCATION:** APN: 365-040-024
**APPROVAL DATE:**
**EFFECTIVE DATE:**
**EXPIRATION DATE:**

## GENERAL

1. Planning Application No. 2021-39 (Conditional Use Permit No. 2021-15 and Commercial Design Review No. 2021-19) proposes to construct and operate a one-story, 950 sq. ft. drive-through coffee stand and related site improvements including a two-lane drive-through with 22 queuing spaces, eight parking spaces and new landscaping on an approximately 0.68-acre portion of an approximately 9.07-acre site in the Commercial Mixed Use zone. The project site is located at 32250 Mission Trail (APN: 365-040-024). The existing approximately 88,057 sq. ft. Pins N Pockets building will remain as is and is not part of this application.

2. The applicant shall defend (with counsel acceptable to the City), indemnify, and hold harmless the City, its Officials, Officers, Employees, Agents, and its Consultants (Indemnitees) from any claim, action, or proceeding against the Indemnitees to attack, set aside, void, or annul an approval of the City, its advisory agencies, appeal boards, or legislative body concerning approval, implementation and construction of CUP 2020-18 and CDR 2020-29, which action is bought within the time period provided for in California Government Code Sections 65009 and/or 66499.37, and Public Resources Code Section 21167, including the approval, extension or modification of CUP 2020-18 and CDR 2020-29 or any of the proceedings, acts or determinations taken, done, or made prior to the decision, or to determine the reasonableness, legality or validity of any condition attached thereto. The Applicant's indemnification is intended to include, but not be limited to, damages, fees and/or costs awarded against or incurred by Indemnitees and costs of suit, claim or litigation, including without limitation attorneys' fees, penalties and other costs, liabilities and expenses incurred by Indemnitees in connection with such proceeding. The City will promptly notify the applicant of any such claim, action, or proceeding against the City. If the project is challenged in court, the City and the applicant shall enter into formal defense and indemnity agreement, consistent with this condition.

3. Within 30 days of project approval, the applicant shall sign and complete an "Acknowledgment of Conditions" and shall return the executed original to the Community Development Department for inclusion in the case records.

## PLANNING DIVISION

4. Conditional Use Permit No. 2021-15 shall lapse and become void two years following the date on which the conditional use permit became effective, unless one of the following: (1) prior to the expiration of two years, a building permit related to the conditional use permit is issued and construction commenced and diligently pursued toward completion; or (2) prior to the expiration of two years, the applicant has applied for and has been granted an extension of the conditional use permit approval pursuant to subsections (a), (b), and (c) of Lake Elsinore Municipal Code (LEMC) Section 17.415.070.D.2. Subject to the provisions of

DRAFT

LEMC Section 17.415.070.I, a conditional use permit granted pursuant to the provisions of this section shall run with the land and shall continue to be valid upon a change of ownership of the site or structure, which was the subject of the Conditional Use Permit application.

5. Commercial Design Review No. 2021-19 shall lapse and become void two years following the date on which the design review became effective, unless one of the following: (1) prior to the expiration of two years, a building permit related to the design review is issued and construction commenced and diligently pursued toward completion; or (2) prior to the expiration of two years, the applicant has applied for and has been granted an extension of the design review approval pursuant to subsections (1) and (2) of Lake Elsinore Municipal Code (LEMC) Section 17.415.050.I.1. Notwithstanding conditions to the contrary, a design review granted pursuant to LEMC Section 17.415.050.I.2 shall run with the land for this two-year period, subject to any approved extensions, and shall continue to be valid upon a change of ownership of the site, which was the subject of the design review application.

6. Hours of operation shall be 5:30 AM to 10:00 PM Sunday through Thursday and 5:30 AM to 11:00 PM Friday through Saturday.

7. An application for modification, expansion or other change in a Conditional Use Permit shall be reviewed according to the provisions of the Section 17.415.070 of the LEMC, in a similar manner as a new application

8. If operation of this use raises concerns related to parking, noise, traffic, or other impacts, at the discretion of the Community Development Director, this Conditional Use Permit may be referred back to the Planning Commission for subsequent review at a Public Hearing. If necessary, the Commission may modify or add conditions of approval to mitigate such impacts, or may revoke said Conditional Use Permit.

9. All Conditions of Approval shall be reproduced on page one of building plans prior to their acceptance by the Building and Safety Division, Community Development Department. All Conditions of Approval shall be met prior to the issuance of a Certificate of Occupancy and release of utilities.

10. All future development proposals shall be reviewed by the City on a project-by-project basis. If determined necessary by the Community Development Director or designee, additional environmental analysis will be required.

11. Any proposed minor revisions to approved plans shall be reviewed and approved by the Community Development Director or designee. Any proposed substantial revisions to the approved plans shall be reviewed according to the provisions of the Municipal Code in a similar manner as a new application. Grading plan revisions shall be reviewed by the City Engineer.

12. Provisions of the City's Noise Ordinance (LEMC Chapter 17.176) shall be satisfied during all site preparation and construction activity. Site preparation activity and construction shall not commence before 7:00 AM and shall cease no later than 5:00 PM, Monday through Friday. Only finish work and similar interior construction may be conducted on Saturdays and may commence no earlier than 8:00 am and shall cease no later than 4:00 p.m. Construction activity shall not take place on Sunday, or any Legal Holidays.

13. No individual signs are approved as part of this approval. The applicant or designee shall

DRAFT

submit an application for a sign permit, pay appropriate fees and receive approval from the Community Development Department for any sign(s) installed at the project site.

14. Graffiti shall be removed within 24 hours.

15. All materials and colors depicted on the approved plans shall be used. If the applicant wishes to modify any of the approved materials or colors depicted on the plans, the applicant shall submit a proposal setting forth the modifications for review by the Community Development Director or his designee

16. The entire site shall be kept free from trash and debris at all times and in no event shall trash and debris remain for more than 24 hours.

17. If any of the conditions of approval set forth herein fail to occur, or if they are, by their terms, to be implemented and maintained over time, if any of such conditions fail to be so implemented and maintained according to their terms, the City shall have the right to revoke or modify all approvals herein granted, deny or further condition issuance of all future building permits, deny revoke, or further condition all certificates of occupancy issued under the authority of approvals herein granted; record a notice of violation on the property title; institute and prosecute litigation to compel their compliance with said conditions or seek damages for their violation

**Prior to Issuance of Grading Permits/Building Permits**

18. Prior to issuance of a building permit, the applicant shall pay Development Impact Fees (DIF) and Multiple Species Habitat Conservation Plan (MSHCP) Fees per LEMC Section 16.85, at the rate in effect at the time of payment.

19. All roof mounted or ground support air conditioning units or other mechanical equipment incidental to development shall be architecturally screened or shielded by landscaping so that they are not visible from neighboring property or public streets. Any roof mounted central swamp coolers shall also be screened, and the Community Development Director, prior to issuance of building permit shall approve screening plan.

20. The project shall meet all requirements of the Elsinore Valley Municipal Water District (EVMWD). The applicant shall submit water and sewer plans to the EVMWD and shall incorporate all district conditions and standards.

21. The property address (in numerals at least six inches high) shall be displayed near the entrance and be easily visible from the front of the subject property and public right-of-way.

22. The applicant shall construct trash enclosure(s) with a decorative roof to match the colors, materials and design of the project architecture.

23. Prior to issuance of a building permit, the Final Landscaping / Irrigation Detail Plans shall be submitted to the Community Development Department with appropriate fees, for review and approval by the Community Development Director or designee.

    a. All planting areas shall have permanent and automatic sprinkler system with 50% plant coverage using a drip irrigation method.

DRAFT

b. All planting areas shall be separated from paved areas with a six inch (6") high and six inch (6") wide concrete curb. Runoff shall be allowed from paved areas into landscape areas.
c. Planting within fifteen feet (15') of ingress/egress points shall be no higher than twenty-four inches (24").
d. Landscape planters shall be planted with an appropriate parking lot shade tree pursuant to the LEMC and Landscape Design Guidelines.
e. No required tree planting bed shall be less than 5 feet wide.
f. Root barriers shall be installed for all trees planted within 10 feet of hardscape areas to include sidewalks.
g. Any transformers and mechanical or electrical equipment shall be indicated on landscape plan and screened as part of the landscaping plan.
h. The landscape plan shall provide for ground cover, shrubs, and trees and meet all requirements of the City's adopted Landscape Guidelines.
i. All landscaping and irrigation shall be installed within affected portion of any phase at the time a Certificate of Occupancy is requested for any building.
j. Final landscape plan must be consistent with approved site plan.
k. Final landscape plans to include planting and irrigation details and shall blend in with the existing shopping center.
l. Final landscape plans shall include drought tolerant planting consistent with Elsinore Valley Municipal Water District standards subject to plan check and approval by the City's landscape plan check consultant.
m. No turf shall be permitted.

24. Landscaping installed for the project shall be continuously maintained to the reasonable satisfaction of the Community Development Director. If it is determined that the landscaping is not being maintained, the Director of Community Development shall have the authority to require the property owner to bring the landscaping into conformance with the approved landscape plan. The continued maintenance of all landscaped areas shall be the responsibility of the developer or any successors in interest.

25. The proposed location of on-site construction trailers shall be approved by the Community Development Director or designee. A cash bond of $1,000 shall be required for any construction trailers placed on the site and used during construction. Bonds will be released after removal of trailers and restoration of the site to an acceptable state, subject to approval of the Community Development Director or designee. Such trailer(s) shall be fully on private property and outside the public right of way.

**BUILDING DIVISION**

**General Conditions**

26. Final Building and Safety Conditions. Final Building and Safety Conditions will be addressed when building construction plans are submitted to Building and Safety for review. These conditions will be based on occupancy, use, the California Building Code (CBC), and related codes which are enforced at the time of building plan submittal.

27. Compliance with Code. All design components shall comply with applicable provisions of the 2022 edition of the California Building, Plumbing and Mechanical Codes: 2022 California Electrical Code; California Administrative Code, 2022 California Energy Codes, 2022 California Green Building Standards, California Title 24 Disabled Access Regulations, and

DRAFT

Lake Elsinore Municipal Code.

28. Green Measures. The application shall provide 10% voluntary green measures on the project, as stipulated by the 2022 California Green Building Standards.

29. Disabled Access. Applicant shall provide details of all applicable disabled access provisions and building setbacks on plans to include:

    a. All ground floor units to be adaptable.
    b. Disabled access from the public way to the entrance of the building.
    c. Van accessible parking located as close as possible to the main entry.
    d. Path of accessibility from parking to furthest point of improvement.
    e. Path of travel from public right-of-way to all public areas on site, such as club house, trach enclosure tot lots and picnic areas.

30. Street Addressing. Applicant must obtain street addressing for all proposed buildings by requesting street addressing and submitting a site plan for commercial or multi-family residential projects or a recorded final map for single- family residential projects. It takes 10 days to issue address and notify other agencies. Please contact Sonia Salazar at ssalazar@lake-elsinore.org or 951-674-3124 X 277.

31. Clearance from LEUSD. A receipt or clearance letter from the Lake Elsinore School District shall be submitted to the Building and Safety Department to ensure the payment or exemption from School Mitigation Fees.

32. Obtain Approvals Prior to Construction. Applicant must obtain all building plans and permit approvals prior to commencement of any construction work.

33. Obtaining Separate Approvals and Permits. Trash enclosures, patio covers, light standards, and any block walls will require separate approvals and permits.

34. Sewer and Water Plan Approvals. On-site sewer and water plans will require separate approvals and permits. Septic systems will need to be approved from Riverside County Environmental Health Department before permit issuance.

35. House Electrical Meter. Applicant shall provide a house electrical meter to provide power for the operation of exterior lighting, irrigation pedestals and fire alarm systems for each building on the site. Developments with single user buildings shall clearly show on the plans how the operation of exterior lighting and fire alarm systems when a house meter is not specifically proposed.

**At Plan Review Submittal**

36. Submitting Plans and Calculations. Applicant must submit to Building and Safety four (4) complete sets of plans and two (2) sets of supporting calculations for review and approval including:

    a. An electrical plan including load calculations and panel schedule, plumbing schematic, and mechanical plan applicable to scope of work.
    b. A Sound Transmission Control Study in accordance with the provisions of the Section 5.507, of the 202241 edition of the California Building Code.

DRAFT

c. A precise grading plan to verify accessibility for the persons with disabilities.
d. Truss calculations that have been stamped by the engineer of record of the building and the truss manufacturer engineer.

**Prior to Issuance of Grading Permit(s)**

37. Onsite Water and Sewer Plans. Onsite water and sewer plans, submitted separately from the building plans, shall be submitted to Building and Safety for review and approval.

38. Demolition Permits. A demolition permit shall be obtained if there is an existing structure to be removed as part of the project. Asbestos report and lead base paint reports are required before demo permit will be issued.

**Prior to Issuance of Building Permit(s)**

39. Plans Require Stamp of Registered Professional. Applicant shall provide appropriate stamp of a registered professional with original signature on the plans. Provide C.D. of approved plans to the Building Division.

**Prior to Beginning of Construction**

40. Pre-Construction Meeting. A pre-construction meeting is required with the building inspector prior to the start of the building construction.

**ENGINEERING DEPARTMENT**

**GENERAL**

41. All new submittals for plan check or permit shall be made using the City's online Citizen Self-Service Portal (CSSP).

42. All plans (Street, Storm Drain, Improvement, Grading) shall be prepared by a Registered Civil Engineer using the City's standard title block.

43. All required soils, geology, hydrology and hydraulic and seismic reports shall be prepared by a Registered Civil Engineer.

44. All slopes and landscaping within the public right-of-way shall be maintained by the property owner, owner's association, firms contracted by the property owner's association, or another maintenance entity approved by the City Council.

45. All open space and slopes except for public parks and schools and flood control district facilities, outside the public right-of-way shall be owned and maintained by the property owner or property owner's association.

46. In accordance with the City's Franchise Agreement for waste disposal & recycling, the applicant shall be required to contract with CR&R Inc. for removal and disposal of all waste material, debris, vegetation and other rubbish generated both during cleaning, demolition, clear and grubbing or all other phases of construction and during occupancy.

47. Applicant shall submit a detailed hydrology and hydraulic study for review for the sufficient

DRAFT

containment and conveyance of the storm water to a safe and adequate point as approved by the City Engineer.

48. The site will accommodate all construction activity, building activity, vehicles, etc. No staging on public streets, or private property belonging to others shall be conducted without the written permission of the property owner.

49. Minimum good housekeeping and erosion and sediment control Best Management Practices (BMPs) as identified by the City shall be implemented.

**FEES**

50. Applicant shall pay all applicable permit application and Engineering Department assessed fees, including without limitation plan check and construction inspection fees, at the prevalent rate at time of payment in full.

51. Applicant shall pay all applicable Mitigation and Development Impact Fees at the prevalent rate at time of payment in full. Mitigation and Development Impact Fees include without limitation:
    - Master Plan of Drainage Fee – Due prior to Grading Permit issuance
    - Traffic Infrastructure Fee (TIF) – Due prior to Building Permit issuance
    - Transportation Uniform Mitigation Fee (TUMF) – Due prior to Occupancy
    - Stephens' Kangaroo Habitat Fee (K-Rat) – Due prior to Grading Permit issuance

**LAND DIVISION-DEDICATION**

52. Project is required to dedicate additional easement for roadway and utilities purposes to provide 60' half-width along the property frontage on Mission Trail.

**STORM WATER MANAGEMENT / POLLUTION PREVENTION / NPDES**

**Design**

53. The project is responsible for complying with the Santa Ana Region National Pollutant Discharge Elimination System (NPDES) Permits as warranted based on the nature of development and/or activity.

54. The 2010 SAR MS4 Permit requires evaluation of the site for implementation of LID Principles and LID Site Design, where feasible, to treat the pollutants of concern identified for the project (Section XXII.E.2, XII.E3, and XII.E.7).

55. A Final Water Quality Management Plan (WQMP) shall be prepared using the Santa Ana Region of Riverside County Guidance Document and approved template and submitted for review and approval to the City.
    - The Final WQMP shall be approved by the City prior to rough grading plan approval, or issuance of any permit for construction, whichever is first.

56. The Final WQMP shall document the following:
    - Detailed site and project description.
    - Potential stormwater pollutants.

DRAFT

- Post-development drainage characteristics.
- Low Impact Development (LID) BMP selection and analysis.
- Structural and non-structural source control BMPs.
- Treatment Control BMPs.
- Site design and drainage plan (BMP Exhibit).
- Documentation of how vector issues are addressed in the BMP design, operation and maintenance.
- GIS Decimal Minute Longitude and Latitude coordinates for all LID and Treatment Control BMP locations.
- HCOC – demonstrate that discharge flow rates, velocities, duration and volume for the post construction condition from a 2-year and 24-hour rainfall event will not cause adverse impacts on downstream erosion and receiving waters, or measures are implemented to mitigate significant adverse impacts downstream public facilities and water bodies. Evaluation documentation shall include pre- and post-development hydrograph volumes, time of concentration and peak discharge velocities, construction of sediment budgets, and a sediment transport analysis. (Note the facilities may need to be larger due to flood mitigation for the 10-year, 6- and 24-hour rain events).
- Operations and Maintenance (O&M) Plan and Agreement (using City approved form and/or CC&Rs) as well as documentation of formation of funding district for long term maintenance costs.
- The grading and/or improvement plan shall include a table listing each stormwater facility, and the plan sheet where it appears.

57. Parking lot landscaping areas shall be designed to provide for treatment, retention or infiltration of runoff.

58. Project hardscape areas shall be designed and constructed to provide for drainage into adjacent landscape.

59. Project trash enclosure shall be covered, bermed, and designed to divert drainage from adjoining paved areas and regularly maintained.

60. If CEQA identifies resources requiring Clean Water Act Section 401 Permitting, the applicant shall obtain certification through the Santa Ana Regional Water Quality Control Board and provide a copy to the Engineering Department.

61. All storm drain inlet facilities shall be appropriately marked “Only Rain in the Storm Drain” using the City authorized marker.

62. The project shall use either volume-based and/or flow-based criteria for sizing BMPs in accordance with NPDES Permit Provision XII.D.4.

63. The project site shall implement full trash capture methods/devices approved by the Region Water Quality Control Board.

64. All restaurants and commercial food handling facilities must provide an area for the washing/steam cleaning of equipment and accessories. The area must be self-contained, equipped with a grease trap, and properly connected to a sanitary sewer. If the wash area is located outdoors, it must be covered, paved have secondary containment, and be connected to the sanitary sewer or other appropriately permitted disposal facility. Plan

DRAFT

Requirements: The Owner/Applicant shall incorporate these food facility requirements into project design and depict on plans, including detail plans as needed.

**Construction**

65. Erosion & Sediment Control – All Projects – Prior to the issuance of any grading or building permit for construction or demolition, the applicant shall submit for review and approval by the City Engineer, an Erosion and Sediment Control Plan as a separate sheet of the grading plan submittal to demonstrate compliance with the City's NPDES Program and state water quality regulations for grading and construction activities. A copy of the plan shall be incorporated into the SWPPP, kept updated as needed to address changing circumstances of the project site, be kept at the project site, and available for review upon request.

**Post-Construction**

66. Prior to the issuance of a certificate of use and/or occupancy, the applicant shall demonstrate compliance with applicable NPDES permits for construction, industrial/commercial, MS4, etc. to include:
    - Demonstrate that the project has compiled with all non-structural BMPs described in the project's WQMP.
    - Provide signed, notarized certification from the Engineer of Work that the structural BMPs identified in the project's WQMP are installed in conformance with approved plans and specifications and operational.
    - Submit a copy of the fully executed, recorded City approved Operations and Maintenance (O&M) Plan and Agreement for all structural BMPs or a copy of the recorded City approved CC&R.
    - The O&M Plan and Agreement and/or CC&R's shall: (1) describe the long-term operation and maintenance requirements for BMPs identified in the BMP Exhibit; (2) identify the entity that will be responsible for long-term operation and maintenance of the referenced BMPs; (3) describe the mechanism for funding the long-term operation and maintenance of the referenced BMPs; and (4) provide for annual certification for water quality facilities by a Registered Civil Engineer. The City format shall be used.
    - Provide documentation of annexation into a CFD for funding facilities to be maintained by the City.
    - Demonstrate that copies of the project's approved WQMP (with recorded O&M Plan or CC&R's attached) are available for each of the initial occupants.
    - Agree to pay for a Special Investigation from the City of Lake Elsinore for a date twelve (12) months after the issuance of a Certificate of Use and/or Occupancy for the project to verify compliance with the approved WQMP and O&M Plan. A signed/sealed certification from the Engineer of Work dated 12 months after the Certificate of Occupancy will be considered in lieu of a Special Investigation by the City.
    - Provide the City with a digital .pdf copy of the Final WQMP.

**UTILITIES**

67. All arrangements for relocation of utility company facilities (power poles, vaults, etc.) out of the roadway shall be the responsibility of the applicant, property owner, and/or his agent. Overhead utilities (34.5 kV or lower) shall be undergrounded (LEMC Section 16.64).

68. Applicant shall apply for, obtain and submit to the City Engineering Department a letter from

DRAFT

Southern California Edison (SCE) indicating that the construction activity will not interfere with existing SCE facilities. Non-Interference Letter (NIL) shall be provided prior to issuance of Grading Permit.

69. Submit a "Will Serve" letter to the City Engineering Department from the applicable water agency stating that water and sewer arrangements have been made for this project and specify the technical data for the water service at the location, such as water pressure, volume, etc. Will Serve letters shall be provided prior to issuance of Grading Permit.

**IMPROVEMENTS**

70. All drainage facilities in this project shall be constructed to Riverside County Flood Control District Standards. All public storm drain improvements shall be constructed as part of the first phase of the project.

71. A drainage study shall be provided. The study shall identify the following: identify storm water runoff from and upstream of the site; show existing and proposed off-site and on-site drainage facilities; and include a capacity analysis verifying the adequacy of the facilities. The drainage system shall be designed to ensure that runoff from a 10-year storm of 6-hour and 24-hour duration under developed condition is equal or less than the runoff under existing conditions of the same storm frequency. Both 6-hour and 24-hour storm duration shall be analyzed to determine the detention

72. All natural drainage traversing the site shall be conveyed through the site, or shall be collected and conveyed by a method approved by the City Engineer. All off-site drainage, if different from historic flow, shall be conveyed to a public facility.

73. Roof drains shall not be allowed to outlet directly through coring in the street curb. Roofs should drain to a landscaped area.

74. The site shall be planned and developed to keep surface water from entering buildings (California Green Building Standards Code 4.106.3).

75. All existing storm drain inlet facilities adjacent to the subject properties shall be retrofitted with a storm drain filter; all new storm drain inlet facilities constructed by this project shall include a storm drain filter.

**PERMITTING/CONSTRUCTION**

76. An Encroachment Permit shall be obtained prior to any work on City right-of-way. The applicant shall submit the permit application, required fees and executed agreements, security and other required documentation prior to issuance.

77. All compaction reports, grade certification, monument certification (with tie notes delineated on 8 ½ X 11" Mylar) shall be submitted to the Engineering Department before final inspection of public works improvements will be scheduled and approved.

DRAFT

## PRIOR TO GRADING PERMIT

### Design

78. A grading plan signed and stamped by a California Registered Civil Engineer shall be submitted for City review and approval for all addition and/or movement of soil (grading) on site. The plan shall include separate sheets for erosion control, haul route and traffic control. The grading plan submittal shall include all supporting documentation and be prepared using City standard title block, standard drawings and design manual.

79. All grading plan contours shall extend to minimum of 50 feet beyond property lines to indicate existing drainage pattern.

80. The grading plan shall show that no structures, landscaping, or equipment are located near the project entrances that could reduce sight distance.

81. If the grading plan identifies alterations in the existing drainage patterns as they exit the site, a Hydrology and Hydraulic Report for review and approval by City Engineer shall be required prior to issuance of grading permits. All grading that modifies the existing flow patterns and/or topography shall be in compliance with Federal, State and Local law and be approved by the City Engineer.

82. A seismic study shall be performed on the site to identify any hidden earthquake faults, liquefaction and/or subsidence zones present on-site. A certified letter from a registered geologist or geotechnical engineer shall be submitted confirming the absence of this hazard prior to grading permit. The location of faults, active or inactive shall be shown on the plan sets.

83. The applicant shall obtain all necessary off-site easements and/or permits for off-site grading and the applicant shall accept drainage from the adjacent property owners.

84. Applicant shall mitigate to prevent any flooding and/or erosion downstream caused by development of the site and/or diversion of drainage.

85. All natural drainage traversing the site (historic flow) shall be conveyed through the site in a manner consistent with the historic flow or to one or a combination of the following: to a public facility; accepted by adjacent property owners by a letter of drainage acceptance; or conveyed to a drainage easement as approved by the City Engineer.

### Permit/Construction

86. Applicant shall execute and submit grading and erosion control agreement, post grading security and pay permit fees as a condition of grading permit issuance.

87. No grading shall be performed without first having obtained a Grading Permit. A grading permit does not include the construction of retaining walls or other structures for which a Building Permit is required.

88. A preconstruction meeting with the City Engineering Inspector (Engineering Department) is required prior to commencement of any grading activity.

DRAFT

89. Prior to commencement of grading operations, applicant is to provide to the City a map of all proposed haul routes to be used for movement of export material. All such routes shall be subject to the review and approval of the City Engineer. Haul route shall be submitted prior to issuance of a grading permit. Hauling in excess of 5,000 cubic yards shall be approved by the City Council (LEMC 15.72.065).

90. Import/Export sites located within the Lake Elsinore City limits must have an active grading permit.

91. Applicant to provide to the City a video record of the condition of all proposed public City haul roads. In the event of damage to such roads, the applicant shall pay full cost of restoring public roads to the baseline condition. A bond may be required to ensure payment of damages to the public right-of-way, subject to approval of the City Engineer.

92. All grading shall be done under the supervision of a geotechnical engineer. Slopes steeper than 2 to 1 shall be evaluated for stability and proper erosion control and approved by the City.

93. Review and approval of the project sediment and erosion control plan shall be completed.

94. Approval of the project Final Water Quality Management Plan (WQMP) for post construction shall be received prior to issuance of a grading or building permit.

95. Applicant shall obtain applicable environmental clearance from the Planning Department and submit applicable clearance document to the Engineering Department. This approval shall specify that the project complies with any and all required environmental mitigation triggered by the proposed grading activity.

96.

**PRIOR TO BUILDING PERMIT**

97. Provide soils, geology and seismic report, including recommendations for parameters for seismic design of buildings, and walls prior to building permit.

**PRIOR TO OCCUPANCY / FINAL APPROVAL**

98. All public improvements shall be completed in accordance with the approved plans or as condition of this development to the satisfaction of the City Engineer.

99. Proof of acceptance of maintenance responsibility of slopes, open spaces, landscape areas, and drainage facilities shall be provided.

100. Applicant shall provide a digital copy of the recorded Covenants, Conditions and Restrictions (CC&Rs) to the Engineering Department.

101. As-built plans for all approved plan sets shall be submitted for review and approval by the City. The developer/owner is responsible for revising the original mylar plans. Once the original mylars have been approved, the developer shall provide the City with a digital copy of the “as-built” plans in .tif format.

102. In the event of the damage to City roads from hauling or other construction related activity,

DRAFT

applicant shall pay full cost of restoring public roads to the baseline condition.

103. Final soil report showing compliance with recommendations, compaction reports, grade certifications, monument certification (with tie notes delineated on 8 ½ X 11" Mylar) shall be submitted in .tif format on a USB flash drive or electronically to the Engineering Department before final inspection will be scheduled.

104. Applicant shall pay all outstanding applicable processing and development fees prior to occupancy and/or final approval.

105. Applicant shall submit documentation pursuant to *City's Security Release* handout.

**CITY OF LAKE ELSINORE FIRE MARSHAL**

106. The applicant/operator shall comply with all requirements of the Riverside County Fire Department Lake Elsinore Office of the Fire Marshal. Questions should be directed to the Riverside County Fire Department, Lake Elsinore Office of the Fire Marshal at 130 S. Main St., Lake Elsinore, CA 92530. Phone: (951) 671-3124 Ext. 225.

107. Knox Box and Gate Access: Buildings shall be provided with a Knox Box. The Knox Box shall be installed in an accessible location approved by the Office of the Fire Marshal. All electronically operated gates shall be provided with Knox key switches and automatic sensors for access. Ref. CFC 506.1

108. Addressing: All commercial buildings shall display street numbers in a prominent location on the address side and additional locations as required. Ref. CFC 505.1 and County of Riverside Office of the Fire Marshal Standard #07-01

**DEPARTMENT OF ADMINISTRATIVE SERVICES**

Annex into the City of Lake Elsinore Community Facilities District No. 2015-2 (Maintenance Services)

109. Prior to Building Permit issuance, the applicant shall annex into the Community Facilities District No. 2015-2 (Maintenance Services) or current Community Facilities District in place at the time of annexation to fund the on-going operation and maintenance of the public right-of-way landscaped areas and neighborhood parks to be maintained by the City and for street lights in the public right-of-way for which the City will pay for electricity and a maintenance fee to Southern California Edison, including parkways, street maintenance, open space and public storm drains constructed within the development and federal NPDES requirements to offset the annual negative fiscal impacts of the project. Alternatively, the applicant may propose alternative financing mechanisms to fund the annual negative fiscal impacts of the project with respect to Maintenance Services. Applicant shall make a non-refundable deposit of $15,000 or at the current rate in place at the time of annexation toward the cost of annexation, formation or other mitigation process, as applicable.

DRAFT

I hereby state that I acknowledge receipt of the approved Conditions of Approval for the above named project and do hereby agree to accept and abide by all Conditions of Approval as approved by the Planning Commission of the City of Lake Elsinore on _____. I also acknowledge that all Conditions shall be met as indicated.

Date: _____

Applicant's Signature: _____

Print Name: _____

Address: _____

_____

Phone Number: _____

DRAFT

Planning Application No. 2021-39
APN: 365-040-024
VICINITY MAP

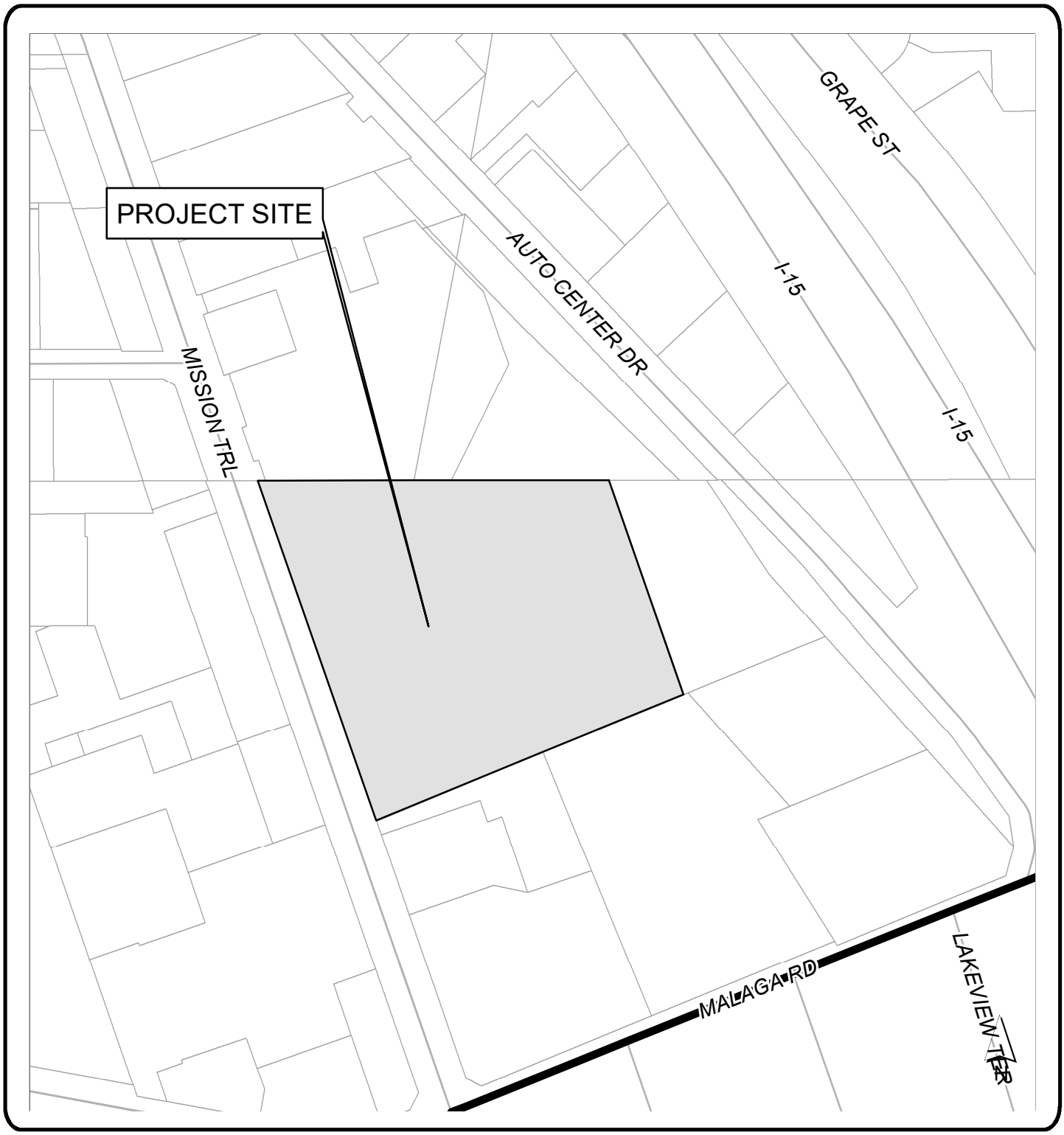


CITY OF LAKE ELSINORE
DREAM EXTREME

Planning Application No. 2021-39
APN: 365-040-024
AERIAL MAP

CITY OF LAKE ELSINORE
DREAM EXTREME

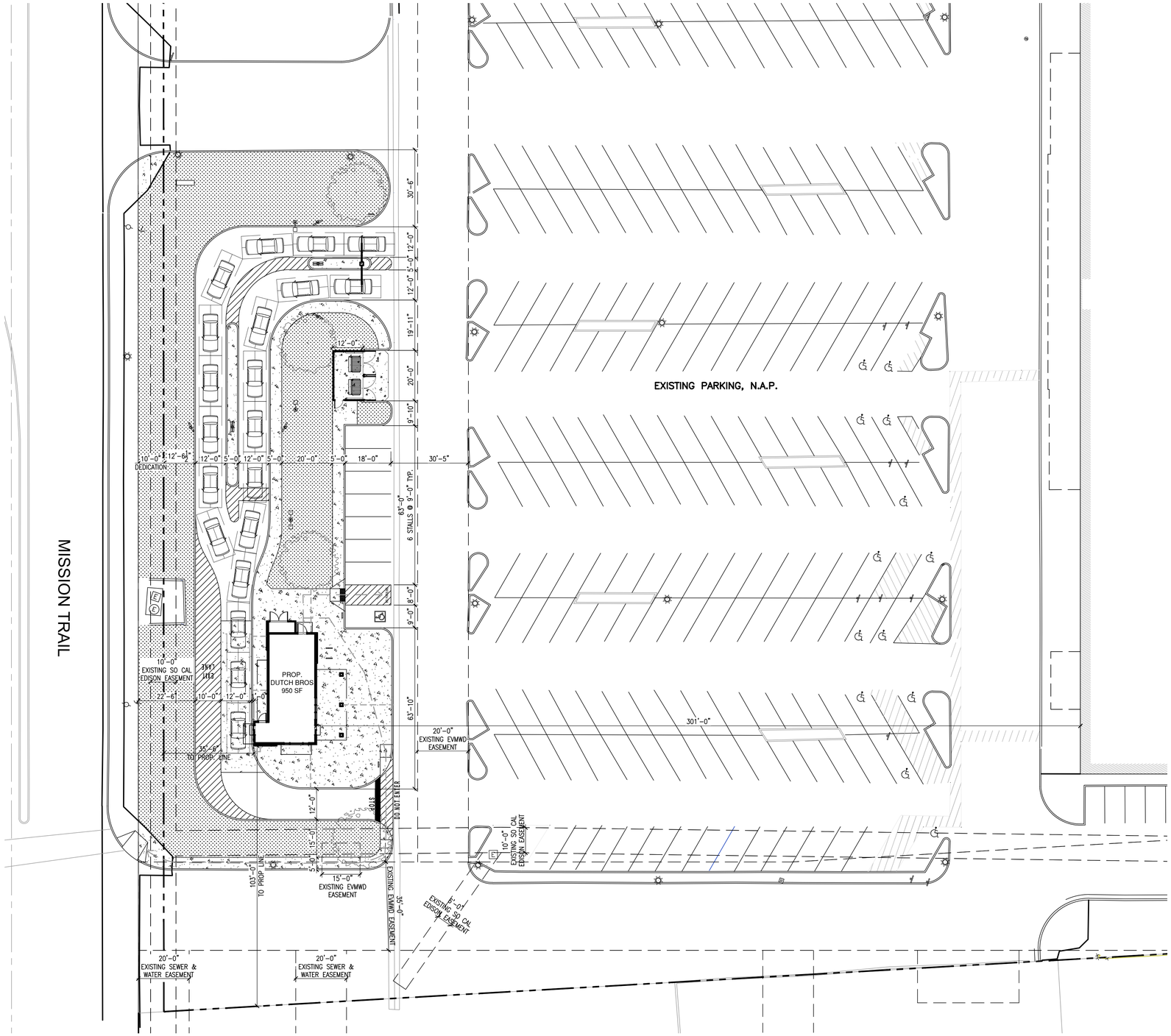


# SITE PLAN

SCALE: 1" = 20'-0"

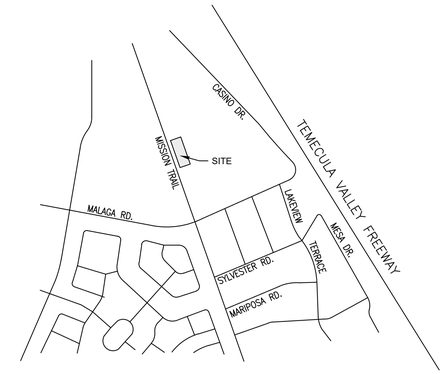


# VICINITY MAP

SCALE: 1" = 800'

## SITE INFORMATION

| | |
|---|---|
| TOTAL LOT AREA: | 395,025 S.F. (9.069 ACRE) |
| AREA OF WORK: | 29,825 S.F. (0.684 ACRE) |
| LEGAL DESCRIPTION: | PARCEL 4 OF PARCEL MAP NUMBER 27821, AS SHOWN BY PARCEL MAP ON FILE IN BOOK 183, PAGES 51 THROUGH 53 OF PARCEL MAPS, RECORDS OF RIVERSIDE COUNTY, CALIFORNIA. |
| APN: | 365-040-024 |
| TOTAL BUILDING AREA: | 89,007 SF (88,057 SF EXISTING, 950 PROPOSED) (22%) |
| TOTAL LANDSCAPE AREA: | 84,410 SF (21%) |
| TOTAL PAVED AREAS: | 221,608 SF (57%) |
| FAR: | 0.22 |
| EXISTING/PROPOSED ZONING: | CMU |
| CONSTRUCTION TYPE: | VB |
| PROPOSED BUILDING HEIGHT: | 24'-0" |
| PARKING ANALYSIS: | |
| REQUIRED PARKING RATIO: | DUTCH BROS: 1 STALL / 250 S.F. = 4 STALLS<br>PINS N POCKETS: 4 STALLS / BOWLING LANE = 96 STALLS |

| INDIVIDUAL PARKING: | REQUIRED | PROVIDED |
|---|---|---|
| STANDARD | 96 | 259 |
| ACCESSIBLE PER ADA | 4 | 14 |
| TOTAL PARKING: | 100 | 273 |

## UTILITY CONTACT INFORMATION

| | |
|---|---|
| SEWER / WATER: | ELSINORE VALLEY MUNICIPAL WATER DISTRICT<br>31315 CHANEY ST.<br>LAKE ELSINORE, CA. 92530<br>(951) 674-3146 |
| ELECTRICITY: | SOUTHERN CALIFORNIA EDISON<br>PO BOX 800<br>ROSEMEAD, CA 91770<br>1-800-655-4555 |
| GAS: | THE GAS COMPANY<br>PO BOX 1626<br>MONTEREY PARK, CA. 91754<br>1-800-427-6673 |
| TRASH & WASTE DISPOSAL: | CR&R DISPOSAL<br>PO BOX 1208<br>PERRIS, CA. 92572<br>1-800-755-8112 |

DUTCH BROS

ARMÉT DAVIS NEWLOVE & ASSOCIATES, AIA ARCHITECTS

1330 OLYMPIC BLVD.
SANTA MONICA, CALIFORNIA 90404
PH 310 452-5533 FAX 310 450-4742

THE USE OF THESE PLANS AND SPECIFICATIONS SHALL BE RESTRICTED TO THE ORIGINAL SITE FOR WHICH THEY WERE PREPARED AND PUBLICATION THEREOF IS EXPRESSLY LIMITED TO SUCH USE. RE-USE, REPRODUCTION OR PUBLICATION BY ANY METHOD, IN WHOLE OR IN PART, IS PROHIBITED. TITLE TO THE PLANS AND SPECIFICATIONS REMAINS WITH THE ARCHITECT WITHOUT PREJUDICE. VISUAL CONTACT WITH THESE PLANS AND SPECIFICATIONS SHALL CONSTITUTE PRIMA FACIE EVIDENCE OF THE ACCEPTANCE OF THE RESTRICTIONS.

LICENSED ARCHITECT
PAUL W. DEPPE
C-28602
RE 1-31-23
STATE OF CALIFORNIA

# Project No: CA4807

Dutch Bros Coffee - New Freestanding Store
DB2550-A1

32250 MISSION TRAIL
LAKE ELSINORE, CA 92530
APN: 365-040-024

DATE: 02/25/2022

| REV: | DATE: | DESCRIPTION: |
|---|---|---|
| | | |

SHEET NAME:

SITE PLAN

SHEET NUMBER:

SP1.0

© 2019 DB Franchising USA, LLC

"The name DUTCH BROS, and all associated logos, distinctive designs, content, information, and other materials featured, displayed, contained herein, and made available by Dutch Bros., including but not limited to, the "look and feel" of the establishments and products, all text, images, colors, configurations, layout, designs, "instructions," photographs, and "pictures" (collectively, the "Materials") are owned by and/or licensed by DB Franchising USA, LLC and are protected by copyright, trademark, trade dress, patent, and/or other intellectual property rights and unfair competition laws under the United States and foreign laws."

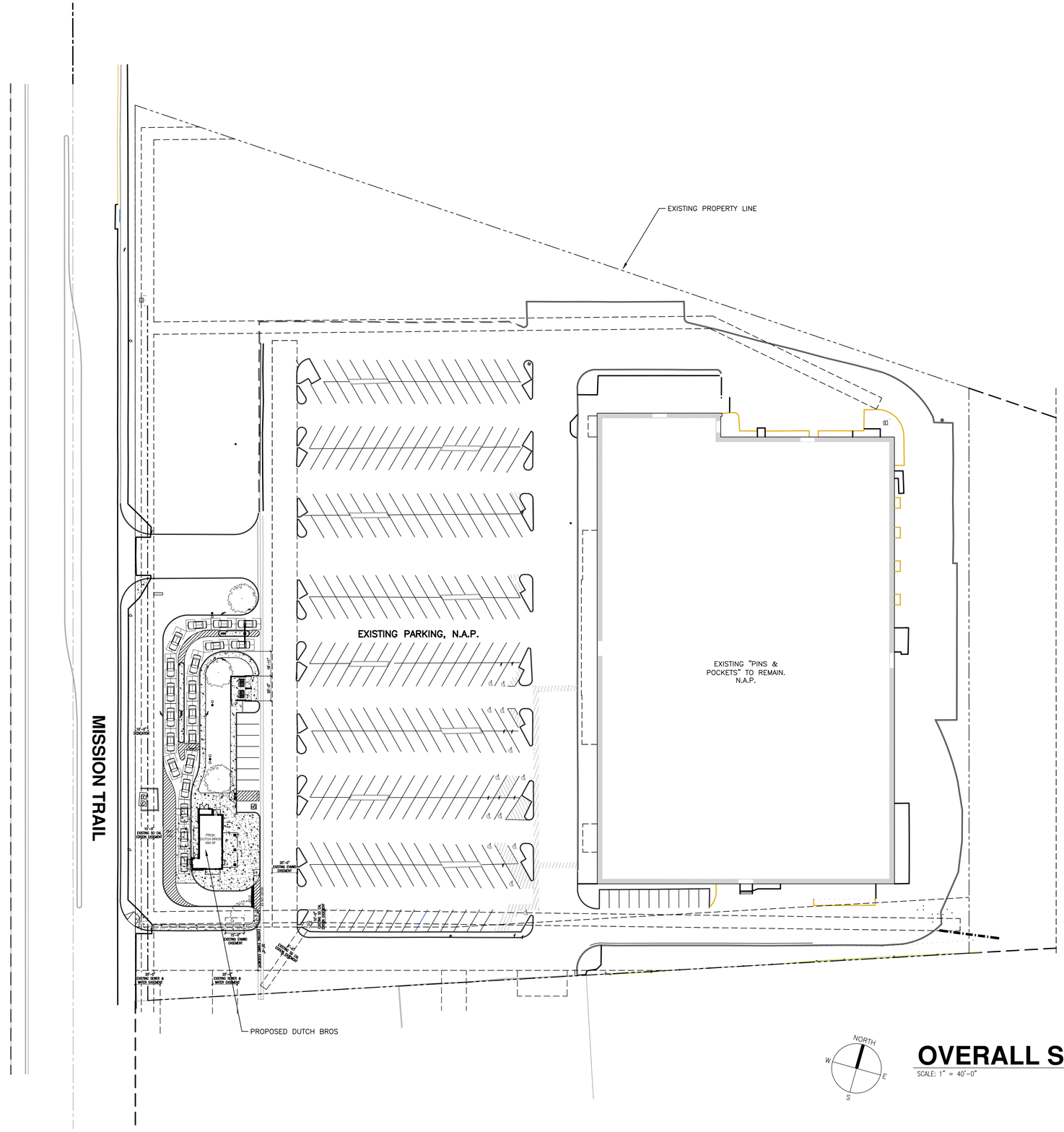


# OVERALL SITE PLAN

SCALE: 1" = 40'-0"

DUTCH BROS Coffee

ARMÉT DAVIS NEWLOVE & ASSOCIATES, AIA ARCHITECTS

1330 OLYMPIC BLVD.
SANTA MONICA, CALIFORNIA 90404
PH 310 452-5533 FAX 310 450-4742

THE USE OF THESE PLANS AND SPECIFICATIONS SHALL BE RESTRICTED TO THE ORIGINAL SITE FOR WHICH THEY WERE PREPARED AND PUBLICATION THEREOF IS EXPRESSLY LIMITED TO SUCH USE. RE-USE, REPRODUCTION OR PUBLICATION BY ANY METHOD, IN WHOLE OR IN PART, IS PROHIBITED. TITLE TO THE PLANS AND SPECIFICATIONS REMAINS WITH THE ARCHITECT WITHOUT PREJUDICE. VISUAL CONTACT WITH THESE PLANS AND SPECIFICATIONS SHALL CONSTITUTE PRIMA FACIE EVIDENCE OF THE ACCEPTANCE OF THE RESTRICTIONS.

LICENSED ARCHITECT
PAUL W. DEPPE
C-28602
RE: 1-31-23
STATE OF CALIFORNIA

Project No: CA4807
Dutch Bros Coffee - New Freestanding Store
DB2550-A1

32250 MISSION TRAIL
LAKE ELSINORE, CA 92530
APN: 365-040-024

DATE: 02/25/2022

| REV: | DATE: | DESCRIPTION: |
|---|---|---|
| | | |

SHEET NAME:

OVERALL SITE PLAN

SHEET NUMBER:

SP1.1

© 2019 DB Franchising USA, LLC

"The name DUTCH BROS, and all associated logos, distinctive designs, content, information, and other materials featured, displayed, contained herein, and made available by Dutch Bros., including but not limited to, the "look and feel" of the establishments and products, all text, images, colors, configurations, [illegible], illustrations, photographs, and pictures (collectively, the "Materials") are owned by and/or licensed by DB Franchising USA, LLC and are protected by copyright, trademark, trade dress, patent, and/or other intellectual property rights and unfair competition laws under the United States and foreign laws."

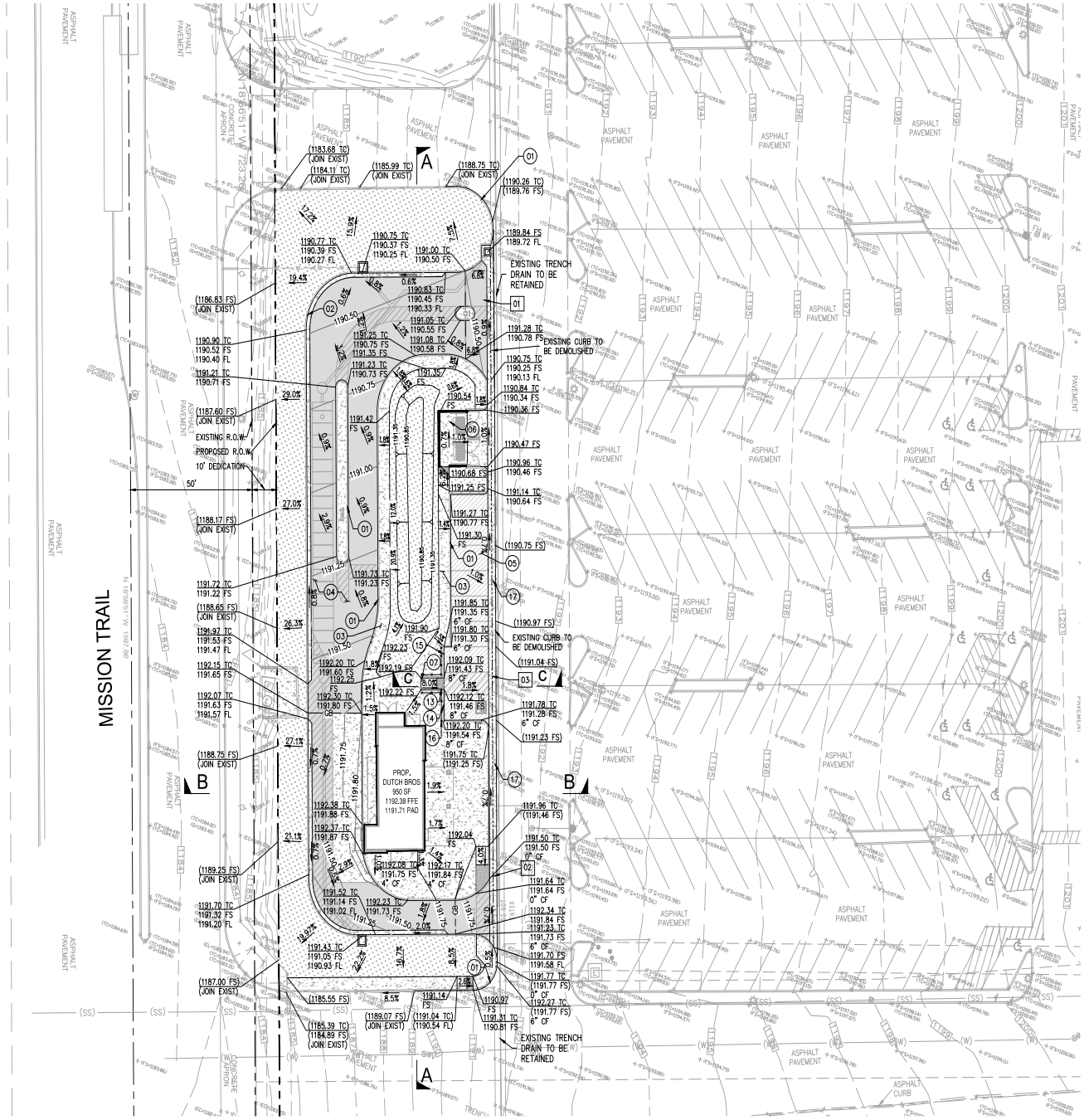


## PRECISE GRADING PLAN

SCALE 1" = 20'

## GRADING CONSTRUCTION NOTES

01 CONSTRUCT 6" PCC CURB PER CITY OF LAKE ELSINORE STD. NO. 202, DETAIL ON SHEET 10.
02 CONSTRUCT 6" CURB & GUTTER PER CITY OF LAKE ELSINORE STD. NO. 200, DETAIL ON SHEET 10.
03 CONSTRUCT 4" PCC SIDEWALK PER CITY OF LAKE ELSINORE STANDARD.
04 CONSTRUCT 5.5" AC OVER 5" CLASS 2 AB OVER PROPERLY COMPACTED SUBGRADE.
05 CONSTRUCT 6" PCC PAVEMENT PER SOILS REPORT RECOMMENDATIONS.
06 CONSTRUCT TRASH ENCLOSURE PER ARCHITECTURAL PLAN.
07 CONSTRUCT ACCESSIBLE RAMP PER DETAIL D AND F ON SHEET 10.
08 CONSTRUCT TRUNCATED DOMES PER PLAN.
09 CONSTRUCT 0" CURB PER DETAIL A, ON SHEET 10.
10 TRANSITION CURB FROM 0" TO 6" PER DETAIL C, ON SHEET 10.
11 TRANSITION CURB FROM 4" TO 6" PER DETAIL B, ON SHEET 10.
12 CONSTRUCT 4" PCC CURB PER CITY OF LAKE ELSINORE STANDARD.
13 TRANSITION CURB FROM 0" TO 8" PER DETAIL C, ON SHEET 10.
14 CONSTRUCT 8" PCC CURB PER CITY OF LAKE ELSINORE STD. NO. 203, DETAIL ON SHEET 10.
15 TRANSITION CURB FROM 6" TO 8" PER DETAIL B, ON SHEET 10.
16 HANDRAIL PER ARCHITECTURAL PLAN.
17 CONSTRUCT 3' WIDE RIBBON GUTTER PER DETAIL E ON SHEET 10.
18 TRANSITION CURB FROM 0" TO 4" PER DETAIL C, ON SHEET 10.

## LEGEND

PROPOSED AC PAVEMENT

PROPOSED PCC PAVEMENT

LANDSCAPE

## NOTE:

1. CONTRACTOR NEEDS TO VERIFY PAD ELEVATION WITH SOIL ENGINEER.

20' 0' 20' 40' 60'

GRAPHIC SCALE: 1"=20'

| MARK | REVISIONS | APPR. | DATE |
|---|---|---|---|
| | | | |

THESE PLANS HAVE BEEN REVIEWED FOR COMPLIANCE WITH THE APPROPRIATE CONDITIONS OF DEVELOPMENT AND/OR CITY AND STATE LAWS AND HAVE BEEN FOUND ACCEPTABLE

REMON HABIB, RCE No. 83156 — DATE
CITY ENGINEER
CITY OF LAKE ELSINORE

PREPARED BY:

**HARIYA INC**

26121 Wallack Place
Loma Linda, CA 92354
(909)499-8270

MANOJ HARIYA — R.C.E. 74429 — DATE

REGISTERED PROFESSIONAL ENGINEER MANOJ BABULAL HARIYA NO. 74429 CIVIL STATE OF CALIFORNIA

SCALE: AS SHOWN

DATE: 09/09/2022

BENCH MARK:
THE ELEVATION SHOWN HEREON ARE BASED UPON USGS BENCHMARK DX1732 (NAVD 1988) ELEVATION=1278.50'

CITY OF LAKE ELSINORE

DUTCH BROS COFFEE
LAKE ELSINORE, CA 92530
32250 MISSION TRAIL

PRECISE GRADING PLAN

SHEET 03 OF 13 SHEETS

FILE No. PG103

EXTERNAL REFERENCES: 21-025_jrg border XREF_TOPO XREF_SITE PLAN 21025_jrg notes XREF_SD XREF_SITE HATCH
FILENAME: Y:\PROJECTS\21-025 Dutch Bros - Lake Elsinore\PG\21025_PG103-104_PG.dwg, LAST SAVED ON: Sep 09 2022 11:06am PLOTTED BY: DELL, ON: Sep 09 2022 11:07am, CFG:

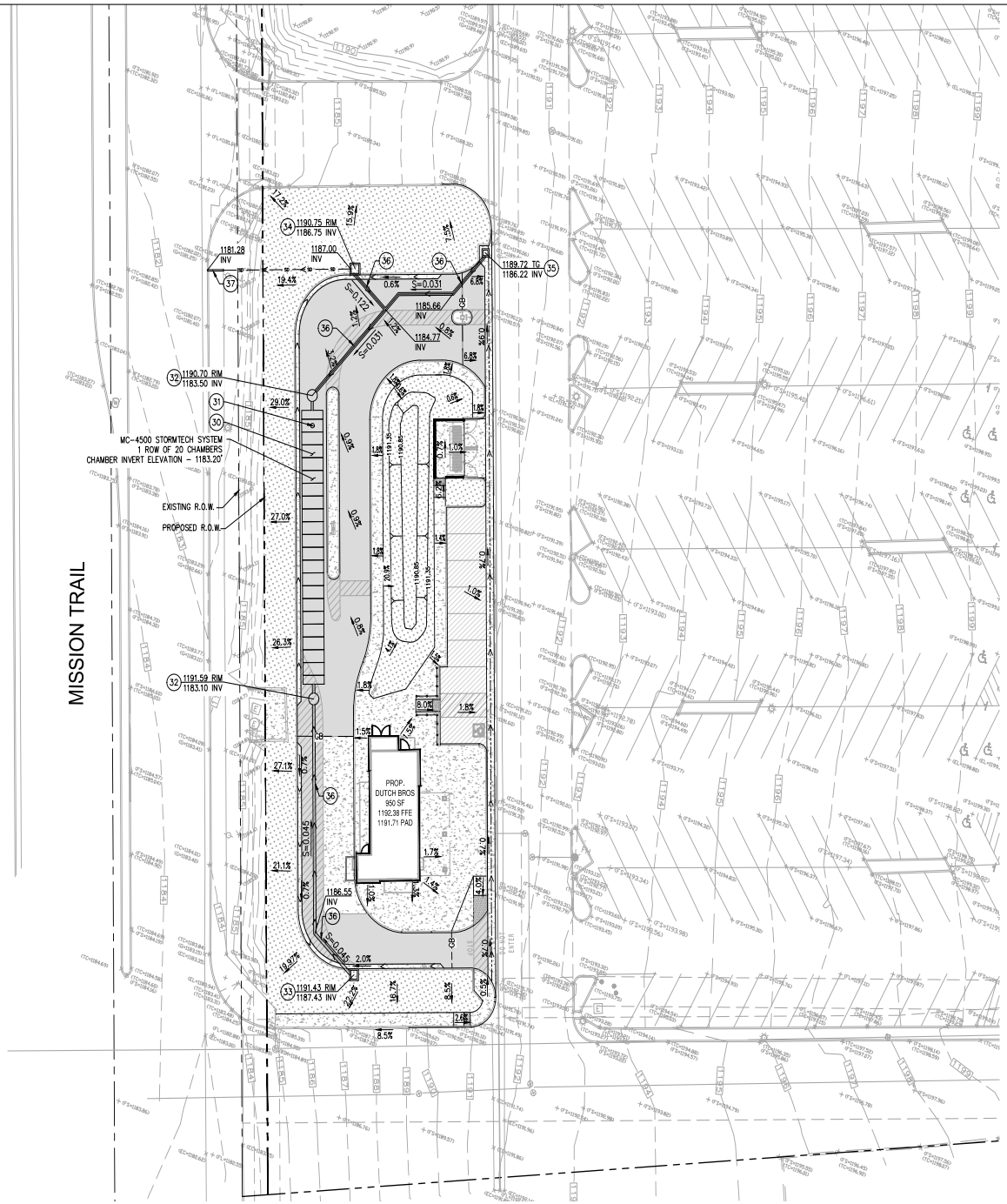


STORM DRAIN PLAN

SCALE 1" = 20'

## STORM DRAIN CONSTRUCTION NOTES

30. INSTALL STORMTECH MC-4500 UNDERGROUND CHAMBER, DETAIL ON SHEET 13
31. INSTALL STORMTECH MC-4500 INSPECTION PORT, DETAIL ON SHEET 13
32. INSTALL 48" STORM DRAIN MANHOLE
33. INSTALL 2.5' STANDARD DEPTH CURB INLET WITH FLOGARD INSERT FILTER, PER PLAN NO. FGP-0002 ON SHEET 10.
34. INSTALL 3.0' STANDARD DEPTH CURB INLET WITH FLOGARD INSERT FILTER, PER PLAN NO. FGP-0002 ON SHEET 10.
35. INSTALL 22" X 22" FLAT GRATED INLET WITH FLOGARD INSERT FILTER, DETAIL ON SHEET 12
36. INSTALL 12" HDPE STORM DRAIN LINE
37. INSTALL 3.5" X 6" PARKWAY DRAIN, PER DETAIL ON SHEET 11

## ABBREVIATIONS:

FL – FLOWLINE
FG – FINISHED GROUND
FFE – FINISHED FLOOR ELEVATION
S – SLOPE

## NOTE:

1. CONTRACTOR SHALL FIELD VERIFY TIE-IN LOCATION OF ALL STORM DRAIN LINES AND SHALL FIELD VERIFY HORIZONTAL AND VERTICAL LOCATION OF ALL EXISTING STORM DRAIN LINES PRIOR TO COMMENCEMENT OF WORK.

## LEGEND

PROPERTY LINE

SD — PROPOSED STORM LINE BELOW 10 INCH

PROPOSED STORM LINE 10 INCH AND ABOVE

20' 0' 20' 40' 60'

GRAPHIC SCALE: 1"=20'

| MARK | REVISIONS | APPR. | DATE |
|---|---|---|---|
| | | | |

THESE PLANS HAVE BEEN REVIEWED FOR COMPLIANCE WITH THE APPROPRIATE CONDITIONS OF DEVELOPMENT AND/OR CITY AND STATE LAWS AND HAVE BEEN FOUND ACCEPTABLE

REMON HABIB, RCE No. 83156 — DATE
CITY ENGINEER
CITY OF LAKE ELSINORE

PREPARED BY:

**HARIYA INC**
26121 Wallack Place
Loma Linda, CA 92354
(909)499-8270

MANOJ HARIYA — R.C.E. 74429 — DATE

REGISTERED PROFESSIONAL ENGINEER MANOJ BABULAL HARIYA NO. 74429 CIVIL STATE OF CALIFORNIA

SCALE: AS SHOWN

DATE: 09/09/2022

BENCH MARK:
THE ELEVATION SHOWN HEREON ARE BASED UPON USGS BENCHMARK DX1732 (NAVD 1988) ELEVATION=1278.50'

CITY OF LAKE ELSINORE

DUTCH BROS COFFEE
LAKE ELSINORE, CA 92530
32250 MISSION TRAIL

STORM DRAIN PLAN

SHEET 05 OF 13 SHEETS

FILE No. PG105

LATEST REFERENCES: 21-025_Job Index, REF_TOPO, REF_SITE PLAN, REF_SD, REF_SITE HATCH, 21025 at ref lw
FILENAME: L:\PROJECTS\21-025 Dutch Bros - Lake Elsinore\PG\21025_PG105_SD.dwg, LAST SAVED ON: Sep 09 2022 10:42am PLOTTED BY: DELL, ON: Sep 09 2022 10:43am, CFG:

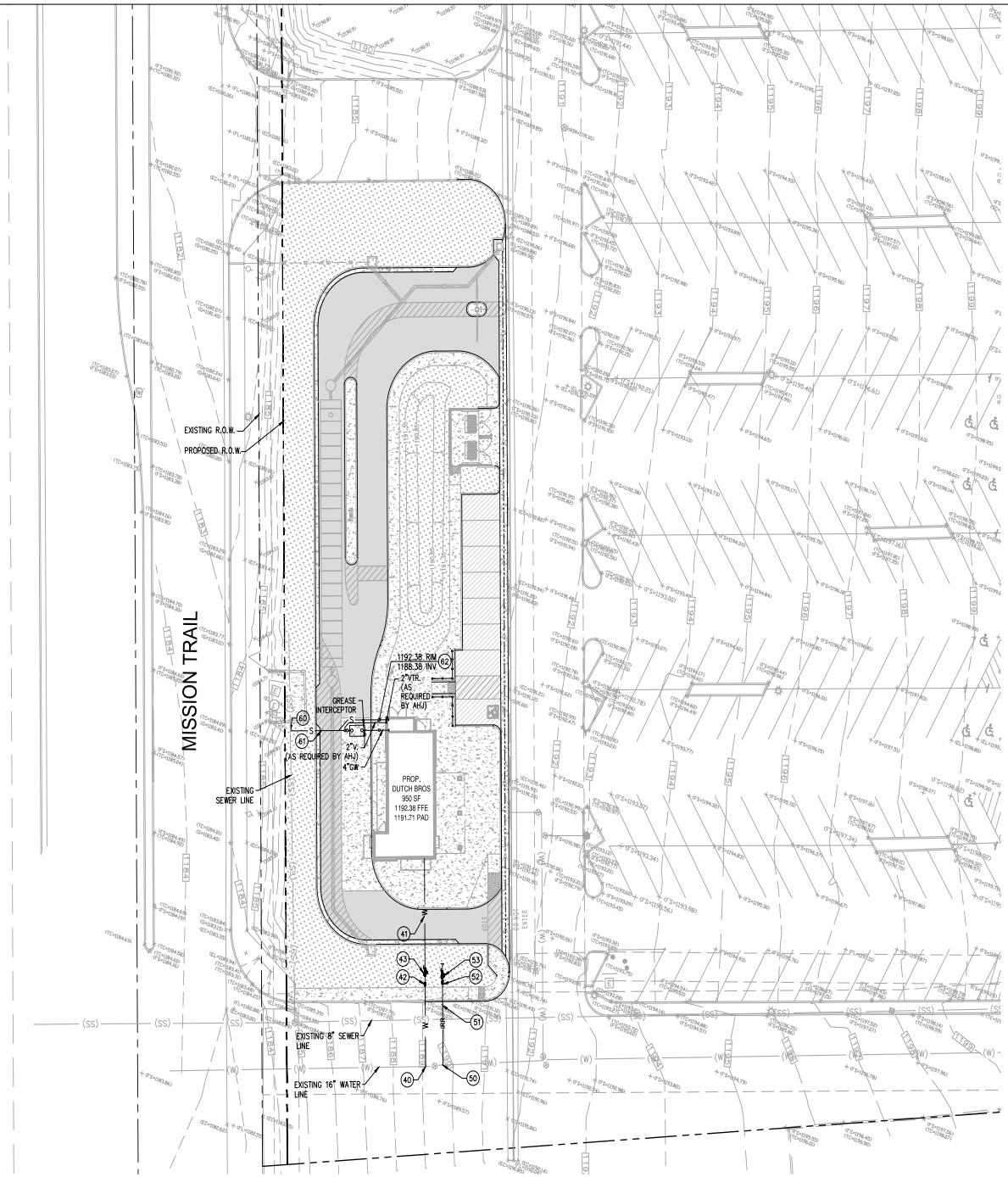


## UTILITY PLAN

SCALE 1" = 20'

## WATER CONSTRUCTION NOTES

40 CONNECT TO EXISTING WATER LINE PER EVMWD STD. DWG. NO. W-10, DETAIL ON SHEET 11.

41 INSTALL 1-1/2" DOMESTIC WATER SERVICE PER EVMWD STD. DWG. NO. W-9, DETAIL ON SHEET 11.

42 INSTALL 1" DOMESTIC WATER METER PER EVMWD STD. DWG. NO. W-9, DETAIL ON SHEET 11.

43 INSTALL 1-1/2" DOMESTIC BACKFLOW PREVENTION ASSEMBLY PER EVMWD STD. DWG. NO. W-21B, DETAIL ON SHEET 11.

## IRRIGATION WATER CONSTRUCTION NOTES

50 CONNECT TO EXISTING WATER LINE PER EVMWD STD. DWG. NO. W-9, DETAIL ON SHEET 11.

51 INSTALL 1" IRRIGATION WATER SERVICE PER EVMWD STD. DWG. NO. W-9, DETAIL ON SHEET 11.

52 INSTALL 1" IRRIGATION WATER METER PER EVMWD STD. DWG. NO. W-9, DETAIL ON SHEET 11.

53 INSTALL 1" IRRIGATION BACKFLOW PREVENTION ASSEMBLY PER EVMWD STD. DWG. NO. W-21B, DETAIL ON SHEET 11.

## SEWER CONSTRUCTION NOTES

60 CONNECT TO EXISTING SEWER LINE PER CITY OF LAKE ELSINORE STD.

61 INSTALL 4" SEWER LATERAL PER CITY OF LAKE ELSINORE STD.

62 INSTALL 4" SEWER CLEAN OUT PER COUNTY OF RIVERSIDE STD NO. 603, DETAIL ON SHEET 11.

## LEGEND

| | |
|---|---|
| — — — — | PROPERTY LINE |
| ——S—— | PROPOSED SEWER LINE |
| ——W—— | PROPOSED WATER LINE |
| ——IRR—— | PROPOSED IRRIGATION WATER LINE |
| ——(W)—— | EXISTING WATER LINE |
| ——(SS)—— | EXISTING SEWER LINE |

## NOTE:

1. CONTRACTOR SHALL FIELD VERIFY TIE-IN LOCATION OF ALL UTILITIES AND SHALL FIELD VERIFY HORIZONTAL AND VERTICAL LOCATION OF ALL UTILITIES PRIOR TO COMMENCEMENT OF WORK.
2. WATER & SEWER LINES CONNECTION LOCATIONS IN FRONT OF THE BUILDING NEEDS TO BE VERIFIED BY CONTRACTOR PER PLUMBING PLANS.

20' 0' 20' 40' 60'

GRAPHIC SCALE: 1"=20'

| MARK | REVISIONS | APPR. | DATE |
|---|---|---|---|
| | | | |

THESE PLANS HAVE BEEN REVIEWED FOR COMPLIANCE WITH THE APPROPRIATE CONDITIONS OF DEVELOPMENT AND/OR CITY AND STATE LAWS AND HAVE BEEN FOUND ACCEPTABLE

REMON HABIB, RCE No. 83156
CITY ENGINEER
CITY OF LAKE ELSINORE

DATE

PREPARED BY:

**HARIYA INC**
26121 Wallack Place
Loma Linda, CA 92354
(909)499-8270

MANOJ HARIYA R.C.E. 74429 DATE

REGISTERED PROFESSIONAL ENGINEER MANOJ BABULAL HARIYA NO. 74429 CIVIL STATE OF CALIFORNIA

SCALE: AS SHOWN

DATE: 09/09/2022

BENCH MARK:
THE ELEVATION SHOWN HEREON ARE BASED UPON USGS BENCHMARK DX1732 (NAVD 1988) ELEVATION=1278.50'

CITY OF LAKE ELSINORE

DUTCH BROS COFFEE
LAKE ELSINORE, CA 92530
32250 MISSION TRAIL

UTILITY PLAN

SHEET 06 OF 13 SHEETS

FILE No. PG106

XREFS: RCE_SITE_1472X_21025_Lot Index, XREF_SITE PLAN, XREF_SD, XREF_TOPO, XREF_LIT
FILENAME: K:\PROJECTS\21-025 Dutch Bros - Lake Elsinore\PG\21025_PG106_U.dwg, LAST SAVED ON: Sep 09 2022 11:08am PLOTTED BY: DELL ON: Sep 09 2022 11:09am, CFG:

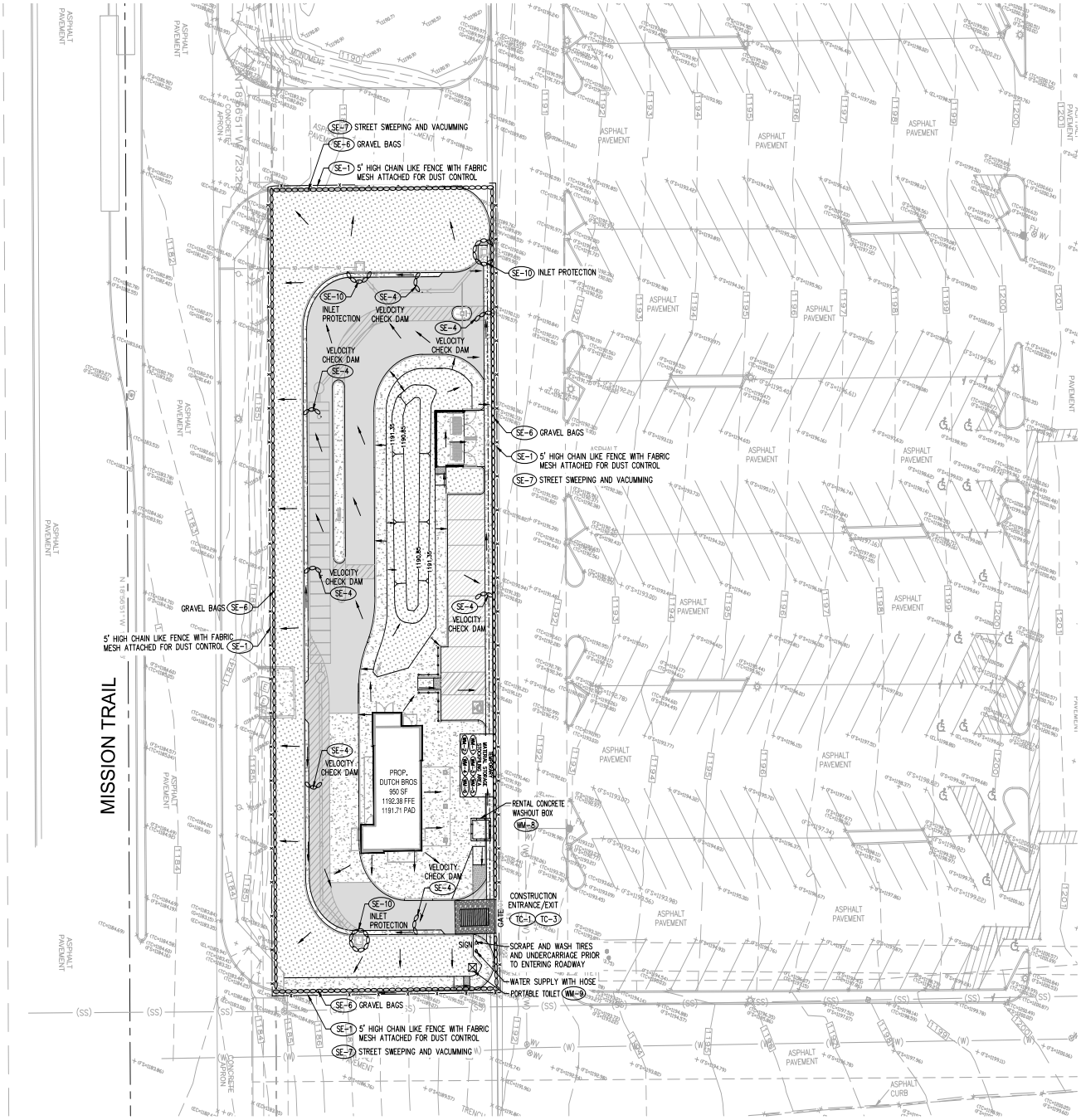


## EROSION CONTROL PLAN

SCALE 1" = 20'

## SWPPP BEST MANAGEMENT PRACTICES:

THE FOLLOWING BMPs AS OUTLINED IN, BUT NOT LIMITED TO, PER "CALIFORNIA STORMWATER BMP HANDBOOK", THE LATEST REVISED EDITION, MAY APPLY DURING THE CONSTRUCTION OF THIS PROJECT. ADDITIONAL MEASURES MAY BE REQUIRED IF DEEMED APPROPRIATE BY THE CITY INSPECTOR. CONTRACTOR IS REQUIRED TO HAVE COPY OF APPLICABLE BMPs ON CONSTRUCTION SITE AT ALL TIME.

- SE-1 SILT FENCE
- SE-4 VELOCITY CHECK DAM
- SE-6 GRAVEL BAGS
- SE-7 STREET SWEEPING AND VACUUMING
- SE-10 INLET PROTECTION
- TC-1 STABILIZED CONSTRUCTION ENTRANCE
- TC-3 ENTRANCE/OUTLET TIRE WASH
- WM-1 MATERIAL DELIVERY AND STORAGE
- WM-2 MATERIAL USE
- WM-3 STOCKPILE MANAGEMENT
- WM-4 SPILL PREVENTION AND CONTROL
- WM-5 SOLID WASTE MANAGEMENT
- WM-6 HAZARDOUS WASTE MANAGEMENT
- WM-8 CONCRETE WASTE MANAGEMENT
- WM-9 SANITARY/SEPTIC WASTE MANAGEMENT

NOTE: CONTRACTOR SHALL PLACE TC-1 AS NEEDED.

## LEGEND:

GRAVEL BAGS PER CITY/COUNTY SPECIFICATIONS & REQUIREMENTS AND PER BMP SE-6

- DOUBLE ROW, 2 BAG HIGH LAYER OF GRAVEL BAGS
- PROPOSED FLOW DIRECTION
- 1 BAG HEIGHT (OVERLAPPED) X 5' LONG VELOCITY CHECK DAM (50' APART)

20' 0' 20' 40' 60'

GRAPHIC SCALE: 1"=20'

| MARK | REVISIONS | APPR. | DATE |
|---|---|---|---|
| | | | |

THESE PLANS HAVE BEEN REVIEWED FOR COMPLIANCE WITH THE APPROPRIATE CONDITIONS OF DEVELOPMENT AND/OR CITY AND STATE LAWS AND HAVE BEEN FOUND ACCEPTABLE

REMON HABIB, RCE No. 83156 — DATE
CITY ENGINEER
CITY OF LAKE ELSINORE

PREPARED BY:

**HARIYA INC**
26121 Wallack Place
Loma Linda, CA 92354
(909)499-8270

MANOJ HARIYA — R.C.E. 74429 — DATE

REGISTERED PROFESSIONAL ENGINEER — MANOJ BABULAL HARIYA — NO. 74429 — CIVIL — STATE OF CALIFORNIA

SCALE: AS SHOWN

DATE: 09/09/2022

BENCH MARK:
THE ELEVATION SHOWN HEREON ARE BASED UPON USGS BENCHMARK DX1732 (NAVD 1988) ELEVATION=1278.50'

CITY OF LAKE ELSINORE

DUTCH BROS COFFEE
LAKE ELSINORE, CA 92530
32250 MISSION TRAIL

EROSION CONTROL PLAN

SHEET 08 OF 13 SHEETS

FILE No. PG108

EXTERNAL REFERENCES: 21-025.dwg border XREF_TOPO XREF_SITE PLAN 21025_pg notes XREF_SD XREF_SITE HATCH
FILENAME: Y:\PROJECTS\21-025 Dutch Bros - Lake Elsinore\PG\21025_PG108-109_EC.dwg, LAST SAVED ON: Sep 09 2022 11:11am PLOTTED BY: DELL, ON: Sep 09 2022 11:12am, CFG:

"The name DUTCH BROS. and all associated logos, distinctive designs, content, information, and other materials featured, displayed, contained herein, and made available by Dutch Bros., including but not limited to, the "look and feel" of the establishments and products, all text, images, colors, configurations, designs, illustrations, photographs, and pictures (collectively, the "Materials") are owned by and/or licensed by DB Franchising USA, LLC and are protected by copyright, trademark, trade dress, patent, and/or other intellectual property rights and unfair competition laws under the United States and foreign laws."

# WINDOW TYPE SCHEDULE

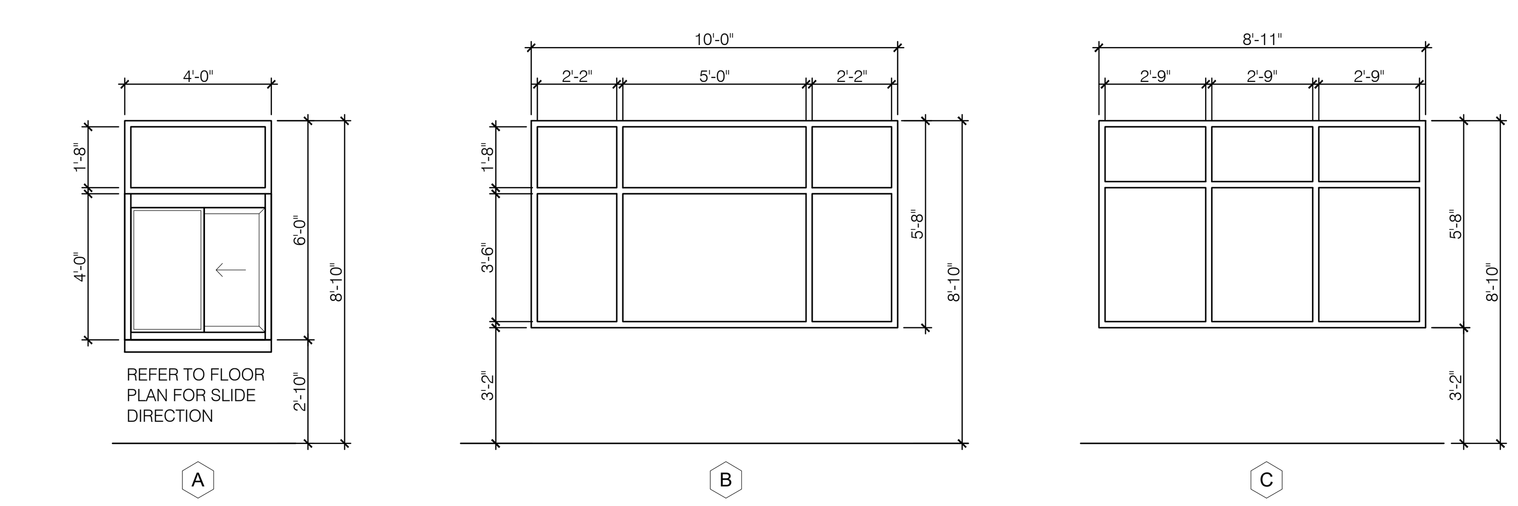


FIXED U-FACTOR = U-0.38
OPERABLE U-FACTOR = U-0.48

NOTES:
- STOREFRONT WINDOW SYSTEMS SHALL HAVE A CLEAR ANODIZED ALUMINUM FACTORY FINISH
- ALL GLAZING SHALL BE TEMPERED GLASS PER SPECS ON SHEET G2.3

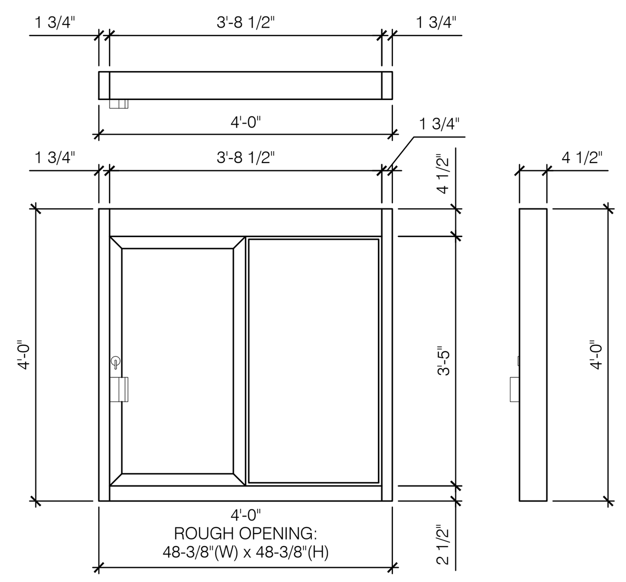


4 DRIVE-THRU WINDOW DETAIL

SCALE: 1/2" = 1'-0"

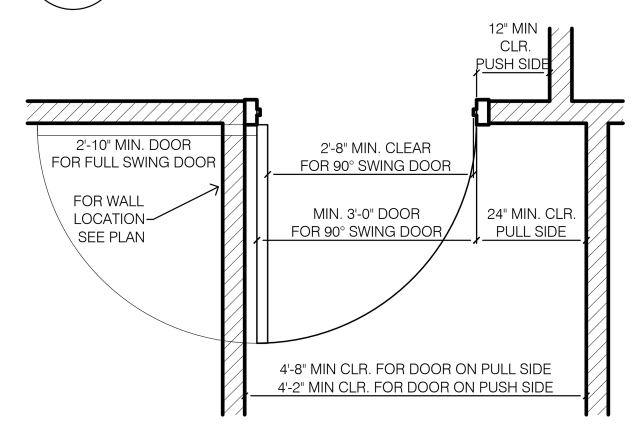


3 TYPICAL DOOR PLAN FOR WHEELCHAIR ACCESS

SCALE: 1/2" = 1'-0"

# FINISH SCHEDULE

| ID TAG | FINISH DESCRIPTION | MANUFACTURER | MODEL | REMARKS |
|---|---|---|---|---|
| FLOOR | | | | |
| FF-1 | FLOOR TILE -TEXTURED | BEDROSIANS | 6"x 6" DOTTI DIAMOND - ANTHRACITE R9 - MATTE | PRODUCTION AREA FIELD TILE |
| FF-2 | FLOOR TILE - SMOOTH | BEDROSIANS | 6"x 6" DOTTI DIAMOND - ANTHRACITE R12 - MATTE | INSTALLED UNDER COUNTERTOPS & EQUIPMENT; REFER TO NOTE PLAN NOTE 6 |
| | EPOXY GROUT | LATICRETE | IG 2000 IND. EPOXY GROUT #2 KIT BLACK | JOB PACK |
| | | | STRECTRALOCK IG 2000 PART A/B EPOXY GROUT | |
| | | | STECTRALOCK PART C COLOR PACKET | |
| | | | PERMACOLOR GROUT | |
| | BOND COAT | LATICRETE | 4-XLT GRAY | |
| | CAULKING | LATICRETE | LATASIL CAULKING | |
| | WATERPROOFING | LATICRETE | HYDRO BAN WATERPROOF/ANTIFRACTURE | |
| WALL | | | | |
| WF-1 | (FRP) FIBERGLASS REINFORCED PANEL | MARLITE | S 100G - 4'x 10' PANELS | COLOR: WHITE; PROVIDE ALL NECESSARY TRIM PIECES |
| WF-2 | CDX 1/2" | – | – | COLOR: OUTDOOR LATEX WHITE PAINT |
| BASE | | | | |
| BF-1 | WALL BASE - COVE | BEDROSIANS | 4" x 8" SMOOTH COVE - ANTHRACITE | SANITARY COVE |
| CEILING | | | | |
| CLG-1 | VINYL FACED ACT | USG | SHEETROCK BRAND LAY-IN CEILING PANEL - 3260 | FLAT WHITE; SMOOTH |
| CLG-2 | FRP OVER 1/2" CDX | MARLITE | S 100G - 4'x 10' PANELS | COLOR: WHITE; PROVIDE ALL NECESSARY TRIM PIECES; PROVIDE ADHESIVE & PAN HEAD SCREWS AT 24" O.C., E.W. |
| PAINT | | | | |
| PT-1 | DB LIGHT GRAY | SHERWIN WILLIAMS | 8656-12046 - BLDG DB LIGHT GRAY | REFER TO S.W. PAINT SPECS |
| PT-2 | DB DARK GRAY | SHERWIN WILLIAMS | 8656-11295 - BLDG DB DARK GRAY | REFER TO S.W. PAINT SPECS |
| PT-3 | DB BLUE | SHERWIN WILLIAMS | 8656-12045 - BLDG DB BLUE | REFER TO S.W. PAINT SPECS |
| PT-4 | – | SHERWIN WILLIAMS | SW-7006 - EXTRA WHIE | SEMI GLOSS |
| GUARDS | | | | |
| CG | CORNER GUARD | AIS INDUSTRIES | CUSTOM | 120" LONG W/ 2" WINGS, DRILLED, 90° SHARP CORNER, BRUSHED FINISH |
| WG | WALL GUARD | AIS INDUSTRIES | CUSTOM | 48" WIDE, WRAP FROM SERVICE WINDOW SILL TO TOP OF COVE BASE, BRUSHED FINSIH |

## GENERAL NOTES:

1. ALL DIMENSIONS TO FACE OF STUD UNLESS OTHERWISE NOTED.
2. G.C. TO VERIFY ALL DIMENSIONS IN THE FIELD BEFORE COMMENCING CONSTRUCTION.
3. ALL INTERIOR FINISHES SHALL COMPLY WITH SECTION 803. INTERIOR FINISH MATERIALS APPLIED TO WALL AND CEILINGS SHALL BE TESTED AS SPECIFIED IN SECTION 803.

   FLAME SPREAD RATINGS:
   WALL TILE - CLASS A - <25
   WALL PAINT - CLASS A - <5
   PLASTIC LAMINATE - CLASS A - <25
   FRP PANELS - CLASS A - <25
   STAINLESS STEEL CORNER GUARDS - CLASS A - <25
   CEILING TILE - CLASS A - <25
4. FIRE BLOCKING MUST BE PROVED IN ACCORDANCE WITH SECTION 718.2 AT THE FOLLOWING LOCATIONS:
   a. IN CONCEALED SPACES OF STUD WALLS AND PARTITIONS, INCLUDING FURRED SPACES, AT THE CEILING AND FLOOR LEVELS.
   b. IN CONCEALED SPACES OF STUD WALLS AND PARTITIONS, INCLUDING FURRED SPACES, AT 10-FOOR INTERVALS ALONG THE LENGTH OF THE WALL.
   c. AT THE INTERCONNECTIONS BETWEEN CONCEALED VERTICAL AND HORIZONTAL SPACES SUCH AS OCCUR AT SOFFITS, DROP CEILINGS AND COVE CEILINGS.
   d. IN CONCEALED SPACES BETWEEN STAIR STRINGERS AT THE TOP AND BOTTOM OF THE RUN AND BETWEEN STUDS ALONG AND IN LINE WITH THE RUN OF STAIRS IF THE WALL UNDER STAIRS IS UNFINISHED.
   e. IN OPENINGS AROUND VENTS, PIPES, DUCTS, CHIMNEYS, FIREPLACES AND SIMILAR OPENINGS WHICH AFFORD A PASSAGE FOR FIRE AT CEILINGS AND FLOOR LEVELS, WITH NONCOMBUSTIBLE MATERIALS.

## PARTITION KEY

- NEW FULL HEIGHT INTERIOR PARTITION
- NEW EXTERIOR WALL CONSTRUCTION
- NEW PRE-FAB WALK-IN COOLER

## PLAN NOTES -

1. 36" Ø FOUNDATION SONO TUBE (OR SIM.) BLOCK OUT, TYP.
2. PROVIDE PLYWOOD SHEATHING ABOVE COOLER
3. PAINT DOOR AND FRAME PT-1, BOTH SIDES
4. LINE OF AWNING ABOVE
5. LINE OF FRAMED CANOPY ABOVE
6. G.C. TO INSTALL FF-2 UNDER ALL EQUIPMENT FOR EASY CLEANING, HATCHED AREAS TO RECEIVE SMOOTH TILE
7. PROVIDE 2X BLOCKING AT HAND SINK
8. G.C. TO INSTALL METAL FURRING CHANNELS & PLYWOOD AT KITCHEN SIDE OF SPANDREL GLASS WINDOW TO ALLOW FOR FLUSH INSTALLATION OF FINISHES AT KITCHEN AREA.

# DOOR SCHEDULE

| # | SIZE: WIDTH | SIZE: HEIGHT | TYPE: DR. | TYPE: FR. | GLASS | MATERIAL: DR. | MATERIAL: FR. | HARDWARE | NOTES: |
|---|---|---|---|---|---|---|---|---|---|
| 01 | 3'-6" | 7'-0" | A | 1 | TEMP. | HM | HMD | GROUP 1 | A,B,C,D,E,F |
| 02 | 3'-0" | 7'-0" | B | 2 | TEMP. | HM | HMD | GROUP 2 | A,B,C,D,E,F |
| 03 | 3'-0" | 7'-0" | C | 2 | - | HM | HMD | GROUP 3 | B,D,F |
| 04 | 7'-0" | 7'-0" | D | 4 | - | HM | HMD | GROUP 4 | B |
| 05 | 3'-0" | 7'-0" | E | 2 | - | HM | HMD | GROUP 5 | B |
| 06 | 3'-0" | 3'-0" | F | 3 | - | HM | HMD | GROUP 6 | B |

NOTES:

HM: HOLLOW METAL, 16 GA.

HMD: HOLLOW METAL WELDED & DIMPLED

| | |
|---|---|
| A | ENSURE EMERGENCY HARDWARE IS IN WORKING CONDITION. |
| B | DOOR & FRAME SHALL BE PAINT GRADE & PAINTED DUTCH BROS DARK GRAY. |
| C | DOOR TO HAVE SIGN POSTED ABOVE THAT STATES: "THIS DOOR TO REMAIN UNLOCKED WHILE BUILDING IS OCCUPIED." |
| D | CLOSER SHALL BE BOLTED THROUGH DOOR LEAF & ARM MOUNTED USING HEAD-JAMB MOUNT. |
| E | PROVIDE ADA COMPLIANT THRESHOLD SET IN SILICONE SEALANT. |
| F | THE FORCE FOR PUSHING OR PULLING OPEN INTERIOR SWINGING EGRESS DOORS, OTHER THAN FIRE DOORS, SJHALL NOT EXCEED 5 LBS. THESE FORCES DO NOT APPLY TO THE FORCE REQUIRED TO RETRACT LATCH BOLTS OR DISENGAGE OTHER DEVICES THAT HOLD THE DOOR IN A CLOSED POSITION. FOR OTHER SWINGING DOORS, THE DOOR LATCH SHALL RELEASE WHEN SUBJECTED TO A 15 LB FORCE. THE DOOR SHALL BE SET IN MOTION WHEN SUBJECTED TO A 30 LB FORCE. THE DOOR SHALL SWING TO A FULL-OPEN POSITION WHEN SUJECTO TO A 15 LB FORCE PER IBC 1010.1.3 |

# DOOR NOTES

1. THIS PLAN IS ISSUED SO THAT THE CONTRACTOR CAN MAINTAIN FULL COMPLIANCE WITH THE INTERNATIONAL BUILDING CODE FOR WHEELCHAIR MANEUVERABILITY AT DOORS. THIS DETAIL INDICATES PARTIAL REQUIREMENTS OF THE CODE. IT IS ADVISED THAT THE CONTRACTOR OBTAIN A COMPLETE COPY OF THESE CODES FOR REFERENCE.
2. THE DIMENSIONS SHOWN ARE CRITICAL FOR COMPLIANCE WITH THE CODES. IT IS THE CONTRACTOR'S RESPONSIBILITY TO INSURE PROPER CLEARANCES FOR WHEELCHAIR MANEUVERABILITY. IF CONFLICTS OCCUR, BRING TO DESIGNERS ATTENTION IMMEDIATELY.
3. FOR FULL SWING DOORS A MINIMUM 2'-10" WIDE DOOR IS REQUIRED FOR CLEARANCE. FOR 90° SWING DOORS A MINIMUM 3'-0" WIDE DOOR IS REQUIRED FOR CLEARANCE.
4. IN ORDER TO ACHIEVE THE REQUIRED 12" OR 18" MINIMUM CLEARANCES AT DOOR AND A MINIMUM PASSAGE WIDTH, THE DOOR FRAME AT HINGE SIDE MAY HAVE TO BE AGAINST THE ADJACENT WALL.
5. THE MAXIMUM EFFORT FOR BOTH INTERIOR AND EXTERIOR DOORS IS 5 LBS. CLOSING SPEED IS 5 SEC MIN. FROM 90° TO 12°.
6. 1/2" MAXIMUM HIGH THRESHOLD (ABOVE FLOOR AND LANDING ON BOTH SIDES) AT BUILDING ENTRANCES AND ALL DOORS.
7. DOOR HARDWARE AT ALL EXIT DOORS TO ALLOW DOORS TO BE OPENED FROM THE INSIDE WITHOUT KEY, SPECIAL KNOWLEDGE OR EFFORT PER APPROPRIATE CODE.
8. SIGNAGE FOR ONLY MAIN ENTRY DOORS ALLOWED TO HAVE KEY LOCKING DEVICES TO STATE, *"THIS DOOR TO REMAIN UNLOCKED WHEN BUILDING IS OCCUPIED"*
9. 10" HIGH KICK PLATE AT BOTTOM OF GLAZED AND STOREFRONT DOORS.
10. ALL DOORS EQUIPPED WITH SINGLE-EFFORT, NON-GRASPING TYPE HARDWARE BETWEEN 34" MIN. AND 44" MAX. ABOVE THE FINISHED FLOOR.
11. WIDTH OF DOORS TO BE A MINIMUM OF 36" TO PROVIDE REQUIRED 32" NET CLEARANCE WIDTH BETWEEN THE FACE OF THE DOOR AND THE JAMB.
12. ALL DOORS TO BE KEYED ALIKE; GC TO PROVIDE A TOTAL OF 4 KEYS.

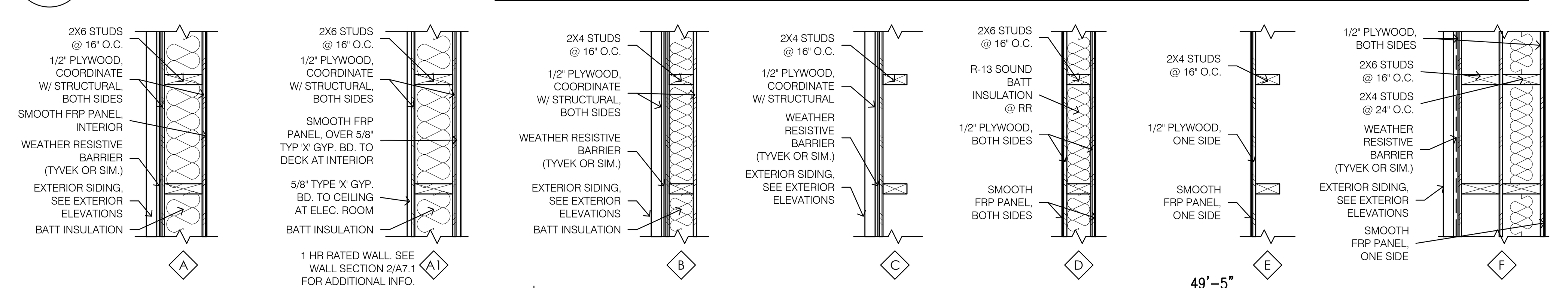


2 WALL ASSEMBLY TYPES

NO T TO SCALE

# DOOR TYPE SCHEDULE

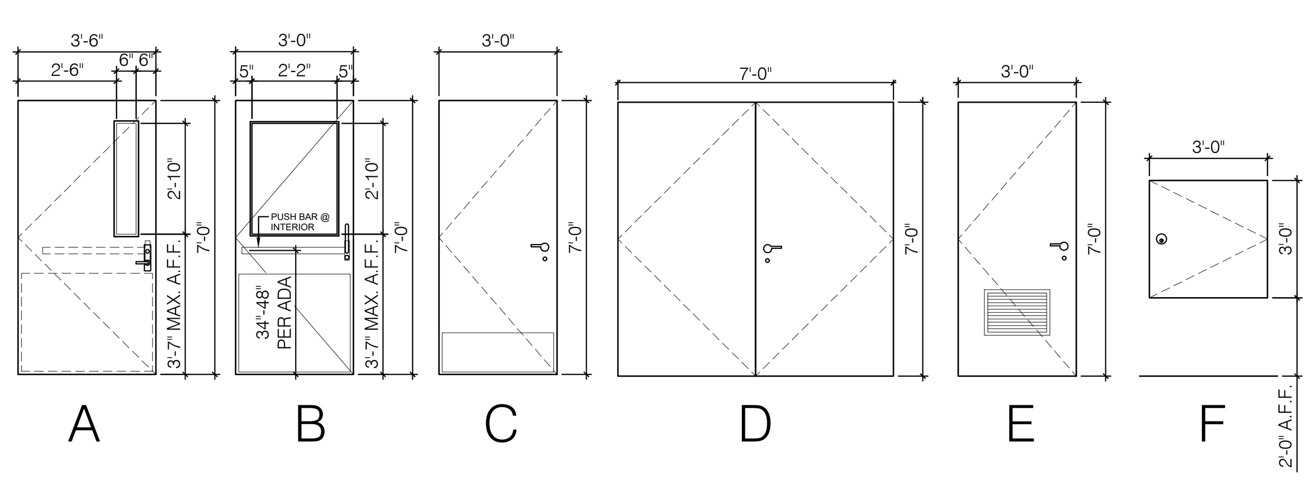


NOTES:

| | |
|---|---|
| 1 | REFERENCE DOOR SCHEDULE FOR SIZES AND MATERIALS (TYP.) |
| 2 | DOOR HARDWARE, CLOSERS, KICKPLATES, PANIC HARDWARE AND THRESHOLDS SHALL BE LOCATED AND INSTALLED PER ADA AND LOCAL REQUIREMENTS. |

# DOOR FRAME TYPE SCHEDULE

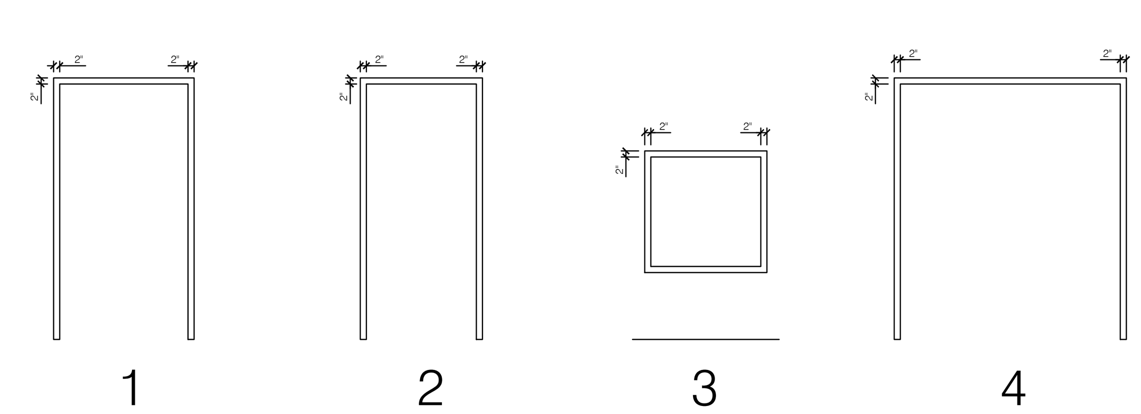


NOTES:

| | |
|---|---|
| 1 | REFERENCE DOOR SCHEDULE FOR SIZES AND MATERIALS (TYP.) |

HARDWARE GROUPS:

GROUP 1:
1 EA. HINGES PIANO HINGES - CONTINUOUS
1 EA. TRILOGY T2 SERIES EXIT TRIM ETDL27 ALARM LOCK
ALL METAL 12 BUTTON KEYPAD, WATERPROOF
VERSION WITH US26D FINISH
1 EA. THRESHOLD PEMKO 2716A
1 EA. DOOR SHOE PEMKO 211APK
1 EA. DOOR SEAL PS074, BLACK
1 EA. FLOOR STOP
1 EA. DOOR CLOSER SARGENT 1431 RUO EN
1 EA. PANIC PUSH HARDWARE
1 EA. 40"x30" KICK PLATE, INTERIOR, HAGER 190S FINISH: US32D

GROUP 2:
1 EA. HINGES PIANO HINGES - CONTINUOUS
1 EA. TRILOGY T2 SERIES EXIT TRIM ETDL27 ALARM LOCK
ALL METAL 12 BUTTON KEYPAD, WATERPROOF
VERSION WITH US26D FINISH
1 EA. THRESHOLD PEMKO 2716A
1 EA. DOOR SHOE PEMKO 211APK
1 EA. DOOR SEAL PS074, BLACK
1 EA. FLOOR STOP
1 EA. DOOR CLOSER SARGENT 1431 RUO EN
1 EA. PANIC PUSH HARDWARE
1 EA. 34"x30" KICK PLATE, INTERIOR, HAGER 190S FINISH: US32D

GROUP 3:
3 EA. HINGES MCKINNEY T2714 4.5X4.5 NRP,
FINISH 652
1 EA. DEADBOLT SCHLAGE B571 INDICATOR,
626 SATIN FINISH
1 EA. PUSH PLATE, 626 SATIN FINISH
1 EA. HANDLE PULL, 626 SATIN FINISH
1 EA. DOOR CLOSER SARGENT 1431 RUO EN
1 EA. 34"X12" KICK PLATE, HAGER 190S FINISH: US32D

GROUP 4:
3 EA. HINGES MCKINNEY T2714 4.5X4.5 NRP, FINISH 652
1 EA. LOCKSET SCHLAGE L9453 ENTRANCE LOCK
SCHLAGE 06 STANDARD HANDLE SATIN FINISH
FULL FACE, ESCUTCHLE0N L583-363 EZ TURN
1 EA. FLUSH BOLT IVES FB31P
1 EA. LATCH GUARD, STAINLESS STEEL, 7"
1 EA. THRESHOLD PEMKO 175A-72
1 EA. DOOR SHOE PEMKO 211APK
1 EA. DOOR SEAL PS074, BLACK
1 EA. KICK DOWN IVES FS555 5" BLACK PAINTED

GROUP 5:
3 EA. HINGES MCKINNEY T2714 4.5 X 4.5 NRP, US26D FINISH
1 EA. LOCKSET SCHLAGE L9453 ENTRANCE LOCK
SCHLAGE 06 STANDARD HANDLE SATIN FINISH
FULL FACE, ESCUTCHLE0N L583-363 EZ TURN
1 EA. THRESHOLD PEMKO 175A-72
1 EA. DOOR SHOE PEMKO 211APK
1 EA. DOOR VENT 24"x12" MIN.
1 EA. KICK DOWN IVES FS555 5" BLK FINISH

GROUP 6:
2 EA. HINGES MCKINNEY T2714 4.5 X 4.5 NRP, US26D FINISH
1 EA. SCHLAGE JD60630 SINGLE CYLINDER DEAD BOLT
1 EA. DOOR SEAL PS074, BLACK

**NOTE:** HAND-ACTIVATED DOOR-OPENING HARDWARE SHALL BE LOCATED 30 MIN. AND 44 MAX. INCHES ABOVE THE FLOOR. LATCHING AND LOCKING DOORS THAT ARE HAND-ACTIVATED AND WHICH ARE IN A PATH OF TRAVEL SHALL BE OPERABLE WITH A SINGLE EFFORT BY LEVER-TYPE HARDWARE, PANIC BARS, PUSH-PULL ACTIVATING BARS, OR OTHER HARDWARE DESIGNED TO PROVIDE PASSAGE WITHOUT REQUIRING THE ABILITY TO GRASP THE OPENING HARDWARE.

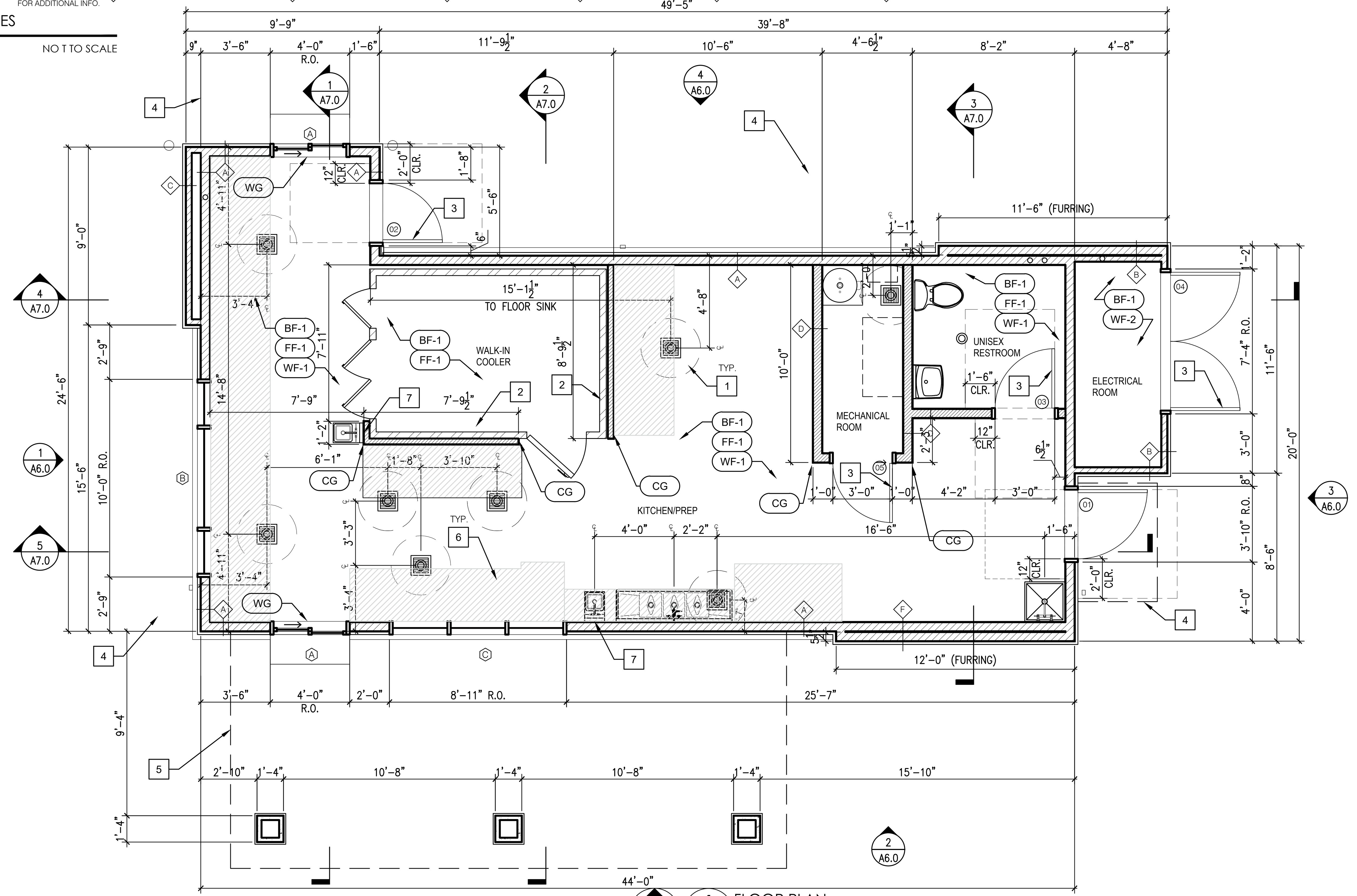


1 FLOOR PLAN

SCALE: 1/4" = 1'-0"

0' 2' 4'

DUTCH BROS Coffee

ARMÉT DAVIS NEWLOVE & ASSOCIATES, AIA ARCHITECTS

1330 OLYMPIC BLVD.
SANTA MONICA, CALIFORNIA 90404
PH 310 452-5533 FAX 310 450-4742

THE USE OF THESE PLANS AND SPECIFICATIONS SHALL BE RESTRICTED TO THE ORIGINAL SITE FOR WHICH THEY WERE PREPARED AND PUBLICATION THEREOF IS EXPRESSLY LIMITED TO SUCH USE. RE-USE, REPRODUCTION OR PUBLICATION BY ANY METHOD, IN WHOLE OR IN PART, IS PROHIBITED. TITLE TO THE PLANS AND SPECIFICATIONS REMAINS WITH THE ARCHITECT WITHOUT PREJUDICE. VISUAL CONTACT WITH THESE PLANS AND SPECIFICATIONS SHALL CONSTITUTE PRIMA FACIE EVIDENCE OF THE ACCEPTANCE OF THE RESTRICTIONS.

LICENSED ARCHITECT PAUL W. DEPPE C-28602 RE. 1-31-23 STATE OF CALIFORNIA

# Project No: CA4807

Dutch Bros Coffee - New Freestanding Store

DB2550-A1

32250 MISSION TRAIL
LAKE ELSINORE, CA 92530
APN: 365-040-024

DATE: 07/16/2021

| REV: | DATE: | DESCRIPTION: |
|---|---|---|
| | | |

SHEET NAME:
FLOOR PLAN/ DETAILS/ SCHEDULES

SHEET NUMBER:
A2.0

© 2019 DB Franchising USA, LLC

"The name DUTCH BROS. and all associated logos, distinctive designs, content, information, and other materials featured, displayed, contained herein, and made available by Dutch Bros., including but not limited to, the "look and feel" of the establishments and products, all text, images, colors, configurations, graphic designs, illustrations, photographs, and pictures (collectively, the "Materials") are owned by and/or licensed by DB Franchising USA, LLC and are protected by copyright, trademark, trade dress, patent, and/or other intellectual property rights and unfair competition laws under the United States and foreign laws."

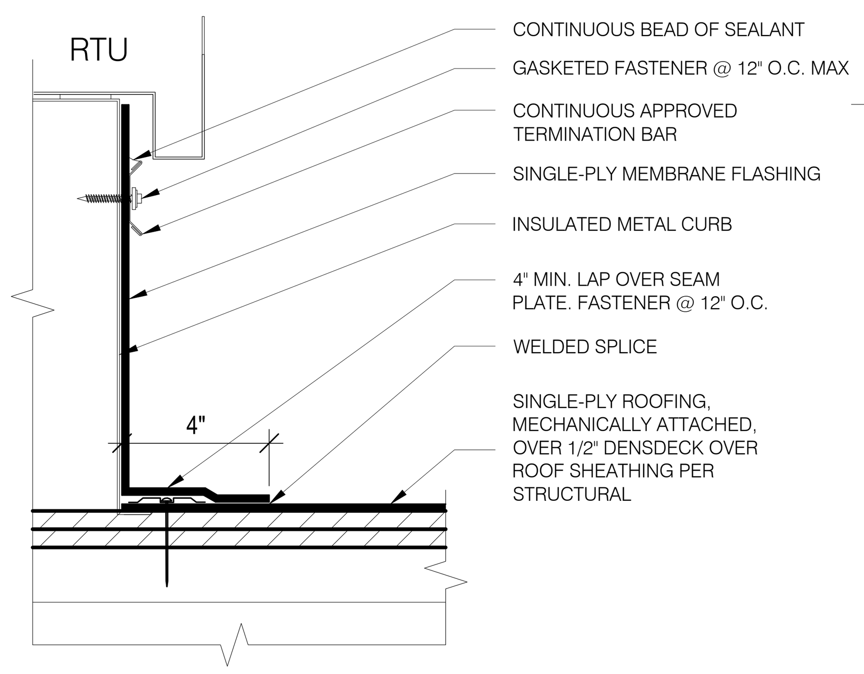


13 SELF-FLASHING CURB

SCALE: 3" = 1'-0"

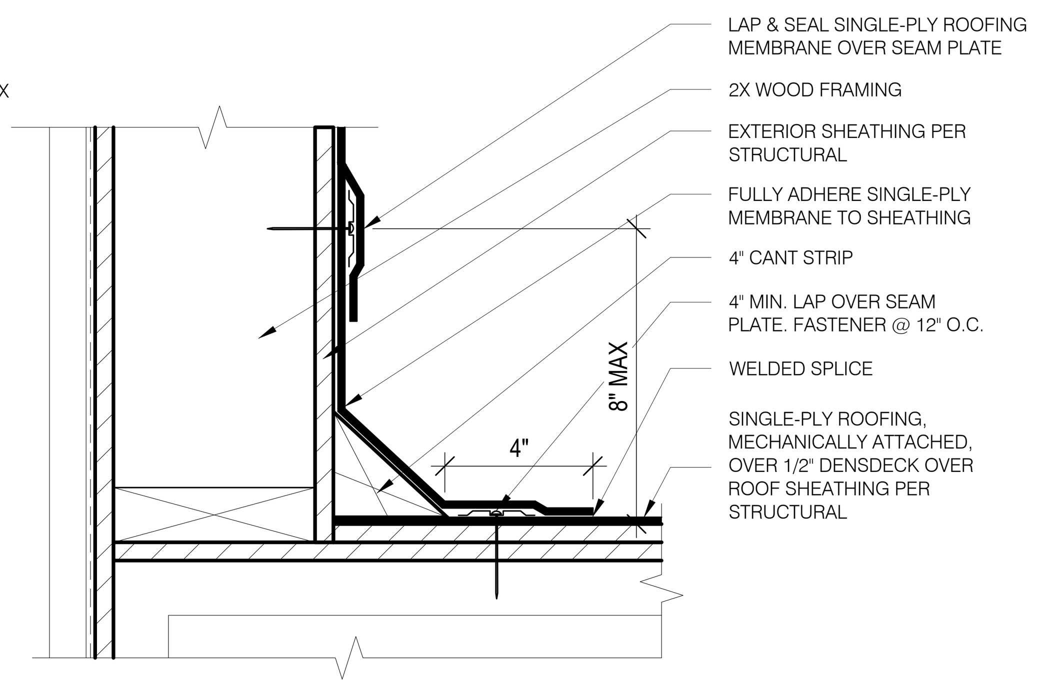


12 TYPICAL ROOF TO PARAPET

SCALE: 3" = 1'-0"

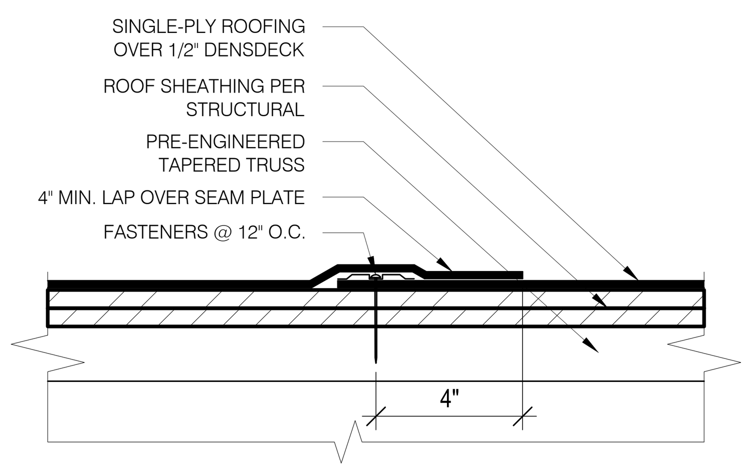


11 SINGLE PLY SYSTEM ASSEMBLY

SCALE: 3" = 1'-0"

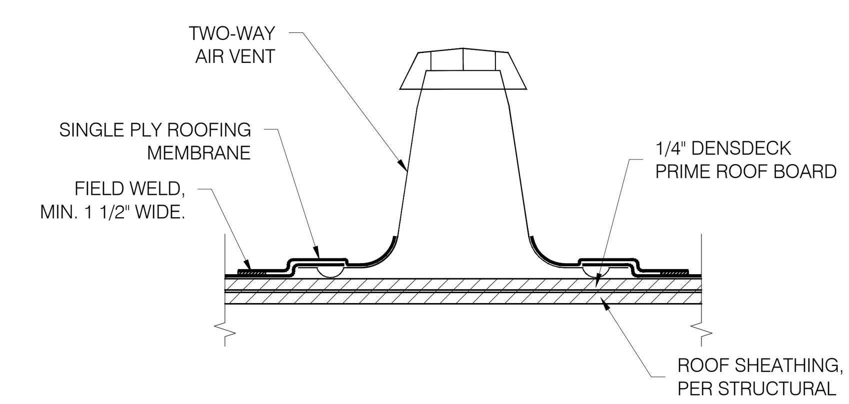


10 TWO-WAY AIR VENT

SCALE: 1 1/2" = 1'-0"

## GENERAL NOTES:

1. COORDINATE WITH PLUMBING, MECHANICAL, AND ELECTRICAL DRAWINGS FOR LOCATION AND NUMBER OF OTHER ROOF PENETRATIONS (IE: VENT STACKS VENT PIPES, CONDUIT PENETRATIONS, ETC.). FLASH ALL PENETRATIONS WEATHER TIGHT.
2. SLOPE ALL CRICKETS AS SHOWN AT A MINIMUM SLOPE OF 1/4" PER FOOT FROM HORIZ. PLANE, UNLESS NOTED OTHERWISE
3. PROVIDE BUILT-UP TAPERED INSULATION ROOF CRICKETS AT ALL CURB LOCATIONS TO ALLOW POSITIVE DRAINAGE AND PREVENT PONDING.
4. ALL METAL ROOF FLASHING DETAILS SHALL BE PER SMACNA AND MANUFACTURERS RECOMMENDATIONS AND REVIEWED BY THE ARCHITECT FOR DESIGN INTENT.
5. PROVIDE ROOF INSULATION SYSTEM BELOW ROOFING MEMBRANE, PER THE ROOFING ASSEMBLIES SPECIFIED IN DIVISION 07 SECTIONS "THERMOPLASTIC POLYOLEFIN ROOFING" AND "APPLIED FIREPROOFING".
6. PROVIDE SUPPLEMENTAL INSULATION OVERBUILDS WHERE INDICATED FOR ROOF SLOPE CONTINUATION.

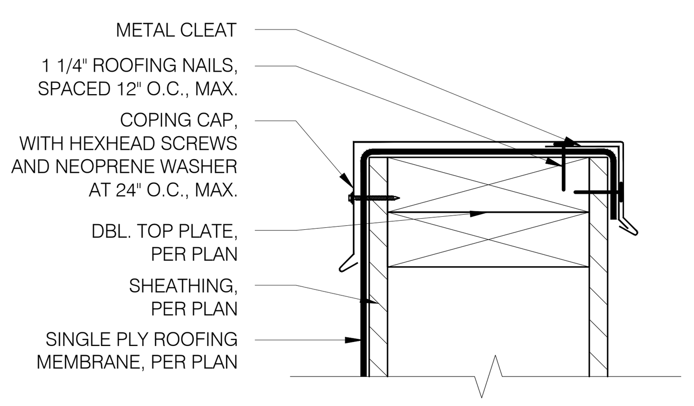


9 PARAPET CAP W/ CONT. CLEAT

SCALE: 3" = 1'-0"

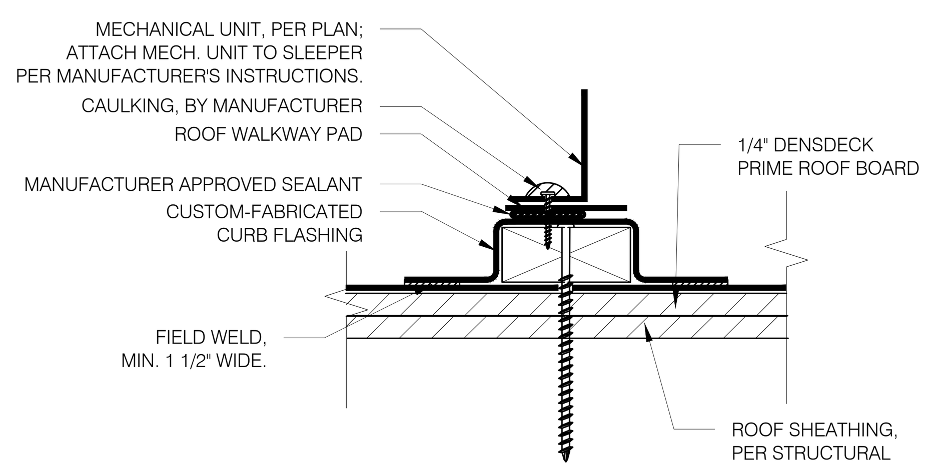


8 MECHANICAL UNIT SLEEPER

ALTERNATE CURB: FLEXI FOOT 250

SCALE: 3" = 1'-0"

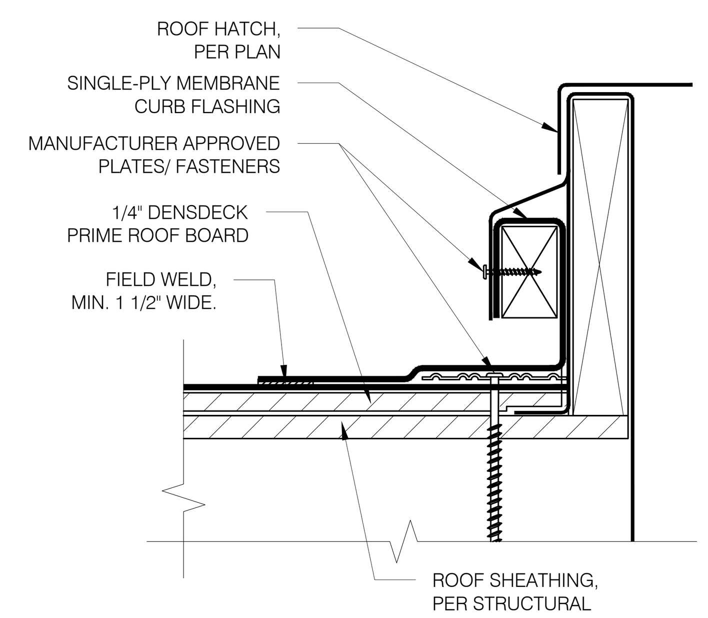


7 ROOF ACCESS HATCH

SCALE: 3" = 1'-0"

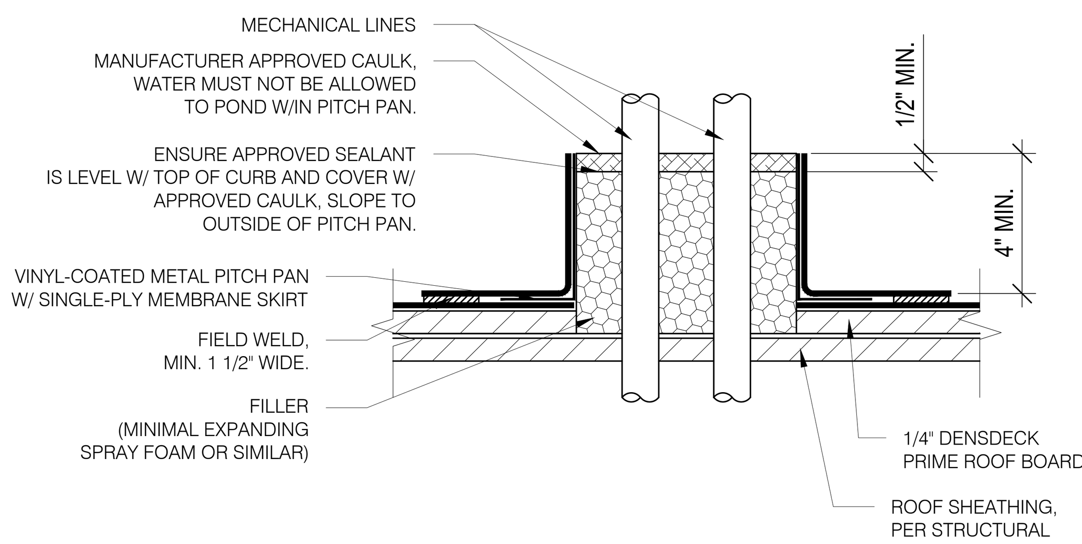


6

SCALE: 3" = 1'-0"

NOTE:
ROOF PARAPET IS GREATER THAN 42" ABOVE ROOF LEVEL; NO FALL PROTECTION REQUIRED ND MECHANICAL EQUIPMENT SCREENED BY PARAPET

ROOFING MATERIAL:
DURO-LAST INC.
DURO-LAST - 50 MIL - WHITE

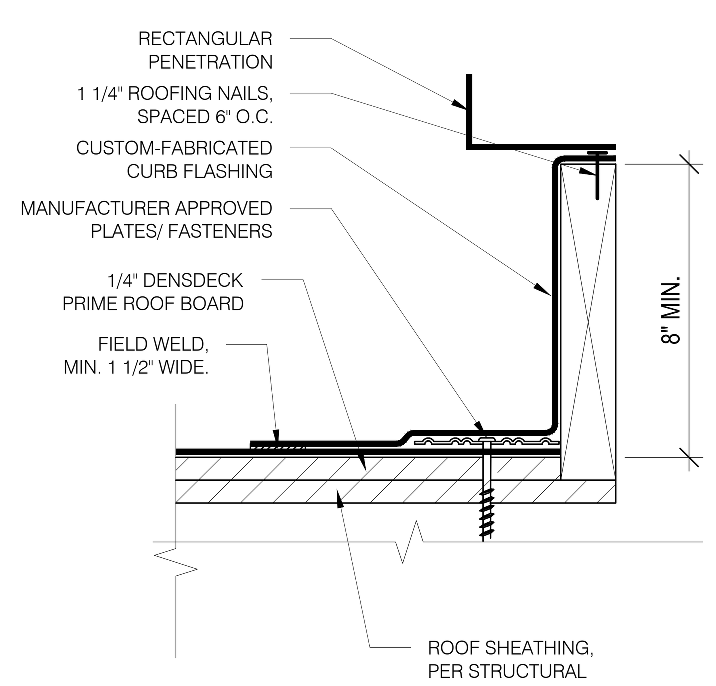


5 CURB DETAIL

SCALE: 3" = 1'-0"

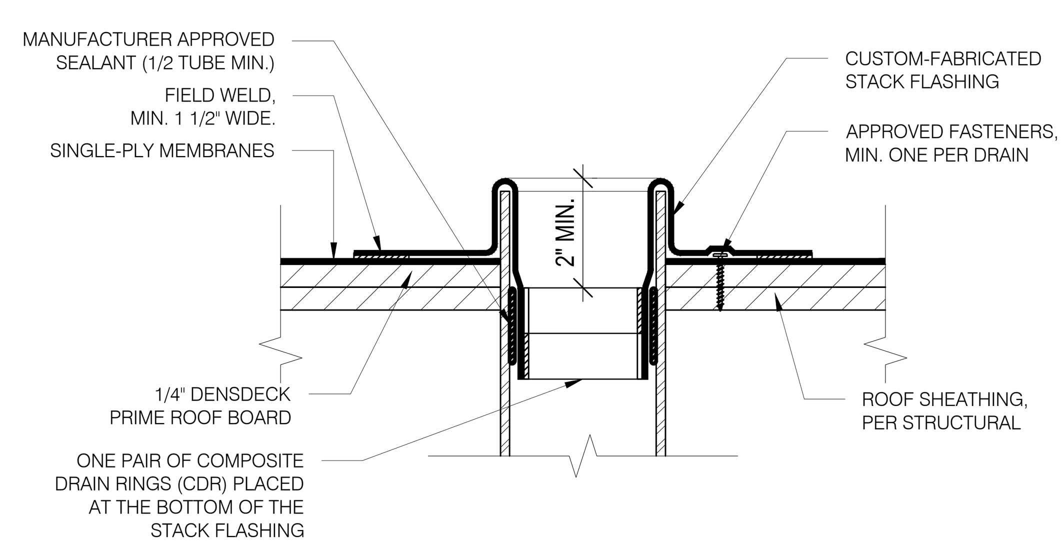


4 ROOF OVERFLOW

SCALE: 3" = 1'-0"

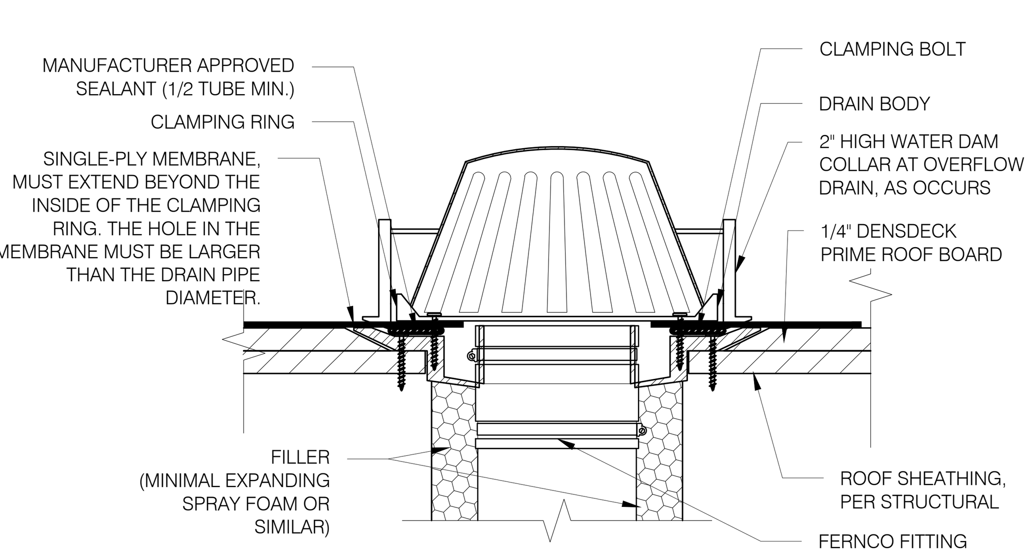


3 TYPICAL 4" ROOF DRAIN & OVERFLOW

SCALE: 3" = 1'-0"

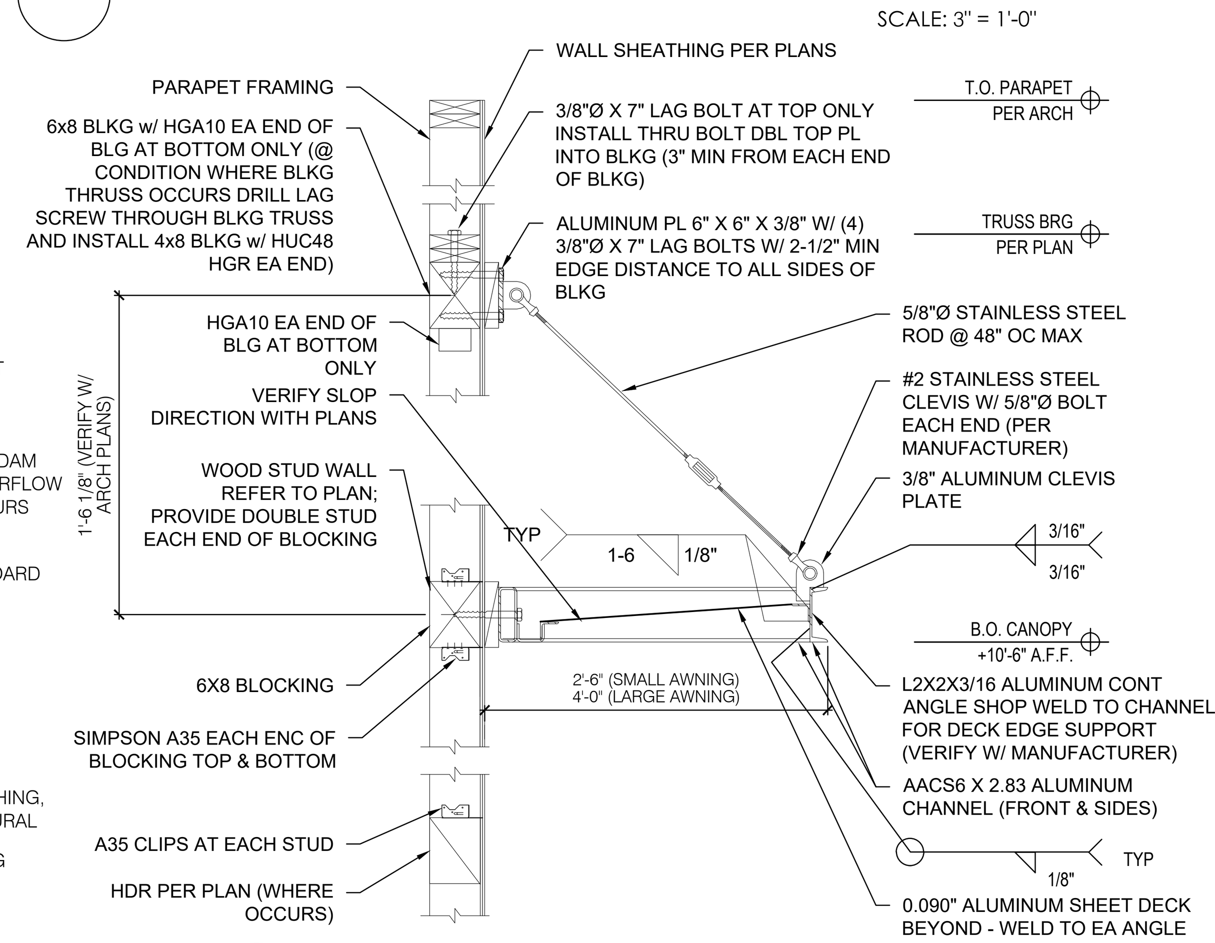


2 AWNING DETAIL

SCALE: 3" = 1'-0"

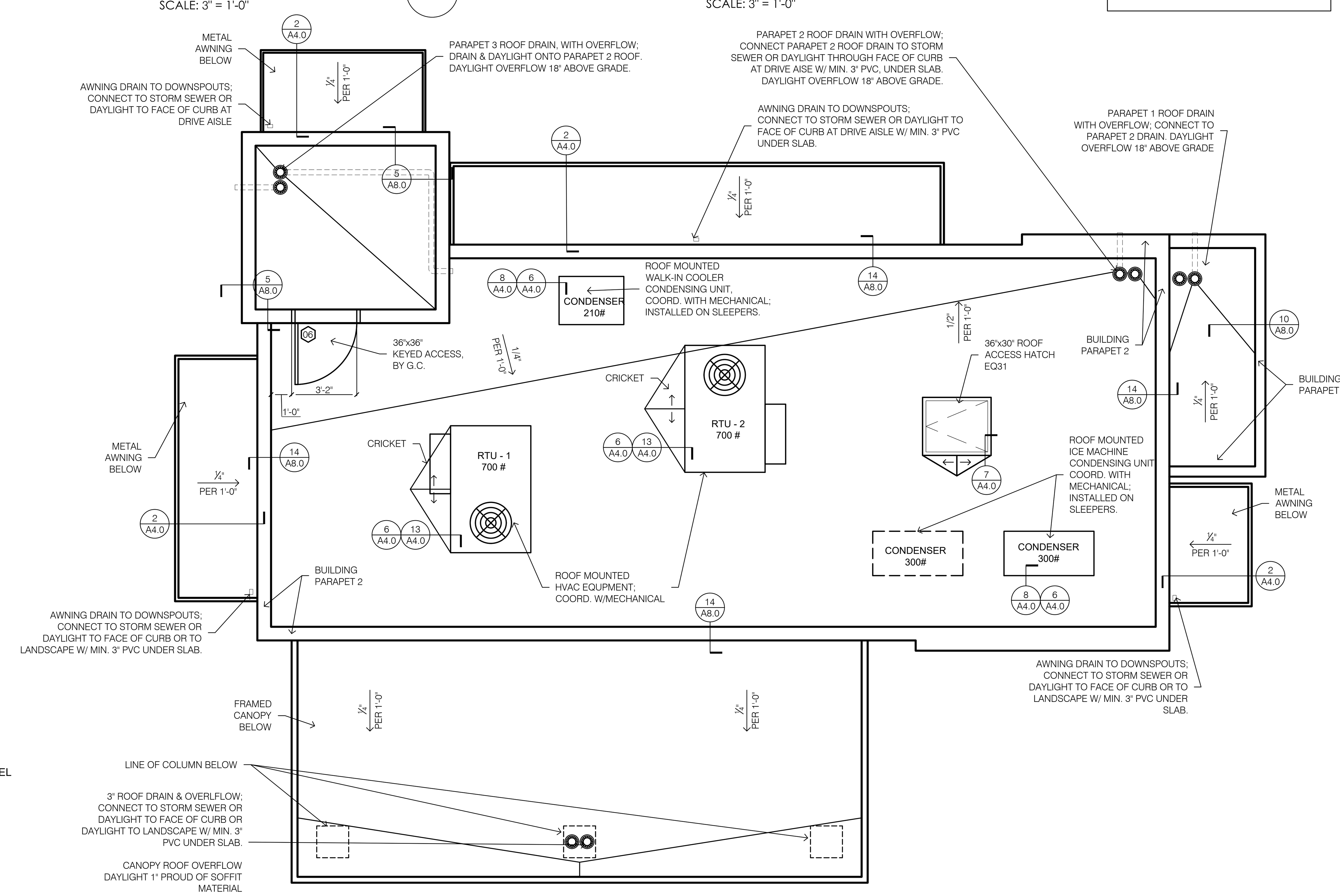


1 ROOF PLAN

SCALE: 1/4" = 1'-0"

ARMÉT DAVIS NEWLOVE & ASSOCIATES, AIA ARCHITECTS
1330 OLYMPIC BLVD.
SANTA MONICA, CALIFORNIA 90404
PH 310 452-5533 FAX 310 450-4742

THE USE OF THESE PLANS AND SPECIFICATIONS SHALL BE RESTRICTED TO THE ORIGINAL SITE FOR WHICH THEY WERE PREPARED AND PUBLICATION THEREOF IS EXPRESSLY LIMITED TO SUCH USE. RE-USE, REPRODUCTION OR PUBLICATION BY ANY METHOD, IN WHOLE OR IN PART, IS PROHIBITED. TITLE TO THE PLANS AND SPECIFICATIONS REMAINS WITH THE ARCHITECT WITHOUT PREJUDICE. VISUAL CONTACT WITH THESE PLANS AND SPECIFICATIONS SHALL CONSTITUTE PRIMA FACIE EVIDENCE OF THE ACCEPTANCE OF THE RESTRICTIONS.

LICENSED ARCHITECT PAUL W. DEPPE C-28602 RE. 1-31-23 STATE OF CALIFORNIA

# Project No: CA4807
Dutch Bros Coffee - New Freestanding Store
DB2550-A1

32250 MISSION TRAIL
LAKE ELSINORE, CA 92530
APN: 365-040-024

DATE: 02/25/2022

| REV: | DATE: | DESCRIPTION: |
|---|---|---|

SHEET NAME:
ROOF PLAN/ ROOF DETAILS

SHEET NUMBER:
A4.0

© 2019 DB Franchising USA, LLC

"The name DUTCH BROS. and all associated logos, distinctive designs, content, information, and other materials featured, displayed, contained herein, and made available by Dutch Bros., including but not limited to, the "look and feel" of the establishments and products, all text, images, colors, configurations, trade dress, patent, and/or other intellectual property rights and unfair competition laws under the United States and foreign laws." Copyright, trademark, illustrations, photographs and pictures (collectively, the "Materials") are owned by and/or licensed by DB Franchising USA, LLC and are protected by copyright, trademark, trade dress, patent, and/or other intellectual property rights and unfair competition laws under the United States and foreign laws. Reproduction, distribution, display and use of the Materials without the express written consent of DB Franchising USA, LLC is prohibited.

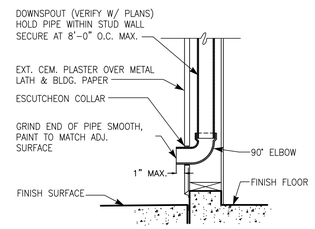


6 OVERFLOW DRAIN PIPE DISCHARGE

SCALE: NOT TO SCALE

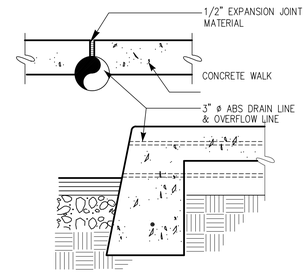


5 ROOF DRAIN PIPE DISCHARGE

SCALE: NOT TO SCALE

## EXTERIOR FINISH SCHEDULE

| ID TAG | MATERIAL | MANUFACTURER | MODEL | REMARKS |
|---|---|---|---|---|
| ZONE 1 (BODY) | | | | |
| 1A | METAL PANEL | WESTERN STATES METAL ROOFING | WESTERN WAVE, 24 ga. | ORIENTATION: VERTICAL; COLOR: BLDG DB DARK GRAY |
| 1B | METAL PANEL | WESTERN STATES METAL ROOFING | WESTERN WAVE, 24 ga. | ORIENTATION: VERTICAL COLOR: BLDG DB LIGHT GRAY |
| ZONE 2 (TOWER) | | | | |
| 2 | METAL PANEL | WESTERN STATES METAL ROOFING | WESTERN WAVE, 24 ga. | ORIENTATION: HORIZONTAL; COLOR: BLDG DB BLUE |
| ZONE 3 (BASE & COLUMNS) | | | | |
| 3 | STONE VENEER | ELDORADO STONE | CLIFFSTONE; BANFF SPRINGS | |
| | STONE VENEER SILL | ELDORADO STONE | SNAPPED EDGE WAINSCOT SILL; PEWTER | |
| ZONE 4 (FRAMED CANOPY) | | | | |
| 4 | FASCIA | WESTERN STATES METAL ROOFING | METAL FASCIA | COLOR TO MATCH DUTCH BROS DARK GRAY |
| 5 | SOFFIT | HEWN ELEMENTS | NATURAL NORTHWESTERN SPRUCE | 1X6, T&G, $\frac{1}{8}$" REVEAL |
| 6 | COLUMNS | ELDORADO STONE | CLIFFSTONE; BANFF SPRINGS | |

NOTE: PROVIDE 3"X2" SMOOTH DOWNSPOUTS AND ALL NECESSARY ADAPTORS AT AWNING AND CANOPY LOCATIONS; DOWNSPOUT COLOR TO MATCH BODY MATERIAL PER ELEVATION

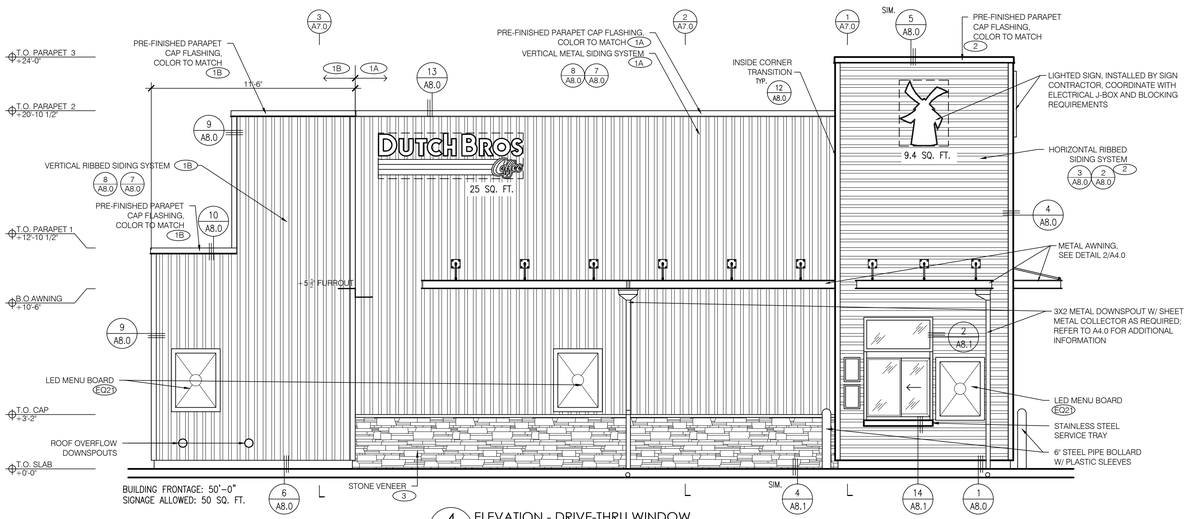


4 ELEVATION - DRIVE-THRU WINDOW

SCALE: 1/4" = 1'-0"

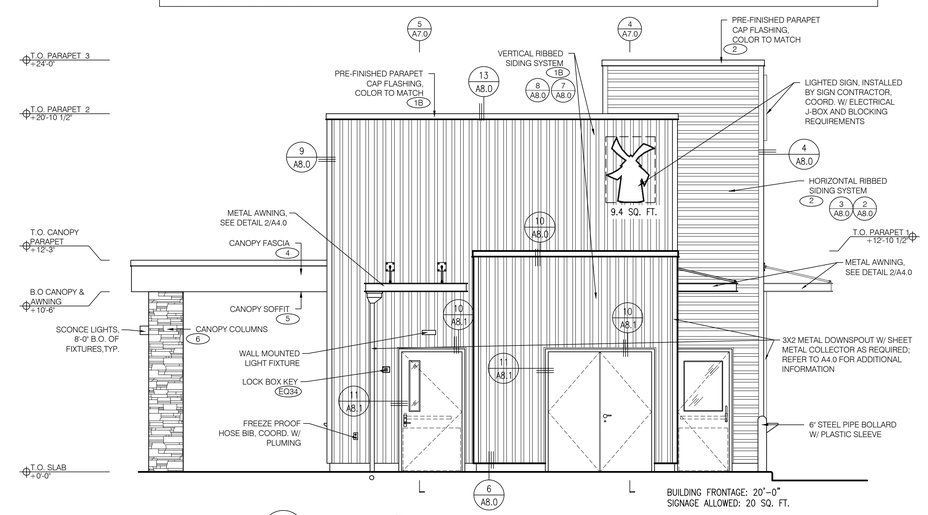


3 REAR ELEVATION

SCALE: 1/4" = 1'-0"

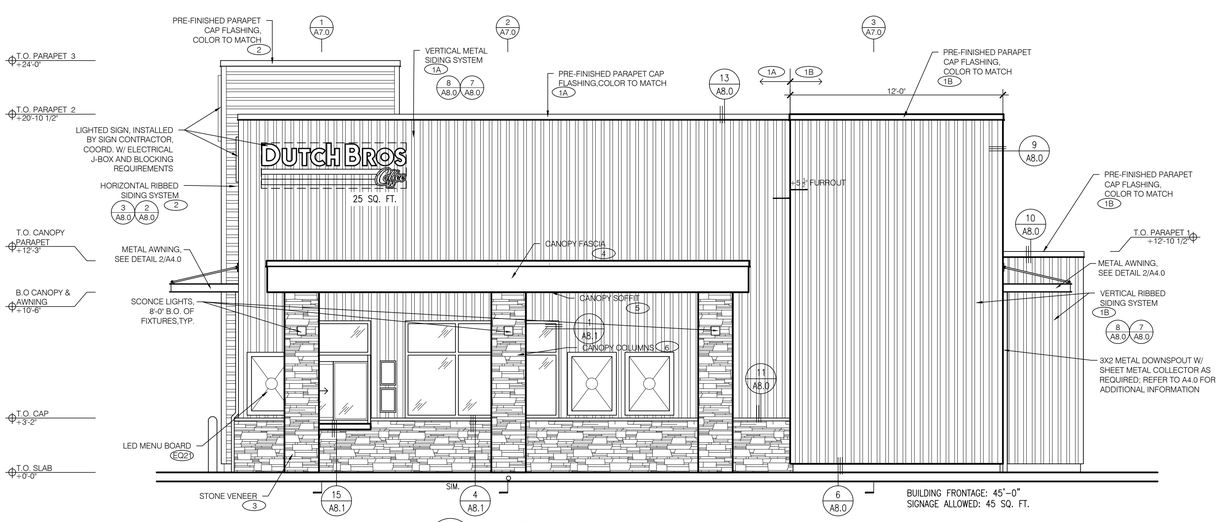


2 ELEVATION - WALK-UP WINDOW

SCALE: 1/4" = 1'-0"

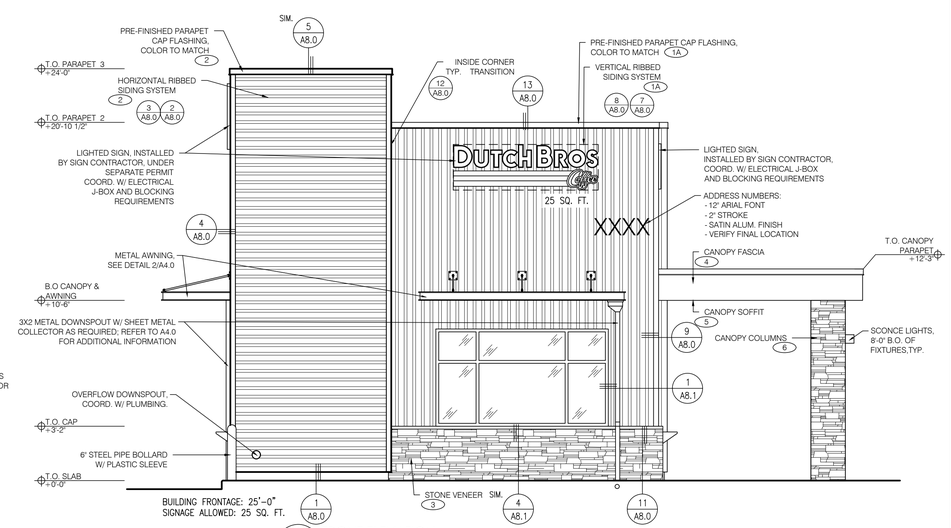


1 FRONT ELEVATION

SCALE: 1/4" = 1'-0"

ARMÉT DAVIS NEWLOVE & ASSOCIATES, AIA ARCHITECTS

1330 OLYMPIC BLVD.
SANTA MONICA, CALIFORNIA 90404
PH 310 452-5533 FAX 310 450-4742

THE USE OF THESE PLANS AND SPECIFICATIONS SHALL BE RESTRICTED TO THE ORIGINAL SITE FOR WHICH THEY WERE PREPARED AND PUBLICATION THEREOF IS EXPRESSLY LIMITED TO SUCH USE. RE-USE, REPRODUCTION OR PUBLICATION BY ANY METHOD, IN WHOLE OR IN PART, IS PROHIBITED. TITLE TO THE PLANS AND SPECIFICATIONS REMAINS WITH THE ARCHITECT WITHOUT PREJUDICE. VISUAL CONTACT WITH THESE PLANS AND SPECIFICATIONS SHALL CONSTITUTE PRIMA FACIE EVIDENCE OF THE ACCEPTANCE OF THE RESTRICTIONS.

LICENSED ARCHITECT
PAUL W. DEPPE
C-28602
RE 1-31-23
STATE OF CALIFORNIA

# Project No: CA4807

Dutch Bros Coffee - New Freestanding Store
DB2550-A1

32250 MISSION TRAIL
LAKE ELSINORE, CA 92530
APN: 365-040-024

DATE: 02/25/2022

| REV: | DATE: | DESCRIPTION: |
|---|---|---|
| | | |

SHEET NAME:

BUILDING ELEVATIONS

SHEET NUMBER:

A6.0

© 2019 DB Franchising USA, LLC

"The name DUTCH BROS. and all associated logos, distinctive designs, content, information, and other materials featured, displayed, contained herein, and made available by Dutch Bros., including but not limited to, the "look and feel" of the establishments and products, all text, images, colors, configurations, illustrations, photographs, and pictures (collectively, the "Materials") are owned by and/or licensed by DB Franchising USA, LLC and are protected by copyright, trademark, trade dress, patent, and/or other intellectual property rights and unfair competition laws under the United States and foreign laws."

For fair use reading: https://www.dutchbros.com/legal/ip.aspx

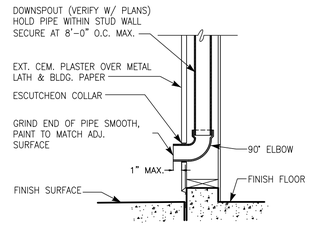


6 OVERFLOW DRAIN PIPE DISCHARGE

SCALE: NOT TO SCALE

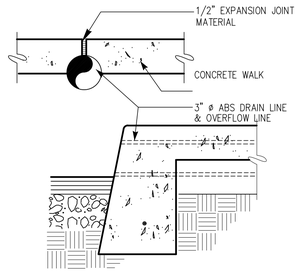


5 ROOF DRAIN PIPE DISCHARGE

SCALE: NOT TO SCALE

## EXTERIOR FINISH SCHEDULE

| ID TAG | MATERIAL | MANUFACTURER | MODEL | REMARKS |
|---|---|---|---|---|
| ZONE 1 (BODY) | | | | |
| 1A | METAL PANEL | WESTERN STATES METAL ROOFING | WESTERN WAVE, 24 ga. | ORIENTATION: VERTICAL; COLOR: BLDG DB DARK GRAY |
| 1B | METAL PANEL | WESTERN STATES METAL ROOFING | WESTERN WAVE, 24 ga. | ORIENTATION: VERTICAL COLOR: BLDG DB LIGHT GRAY |
| ZONE 2 (TOWER) | | | | |
| 2 | METAL PANEL | WESTERN STATES METAL ROOFING | WESTERN WAVE, 24 ga. | ORIENTATION: HORIZONTAL; COLOR: BLDG DB BLUE |
| ZONE 3 (BASE & COLUMNS) | | | | |
| 3 | STONE VENEER | ELDORADO STONE | CLIFFSTONE; BANFF SPRINGS | |
| | STONE VENEER SILL | ELDORADO STONE | SNAPPED EDGE WAINSCOT SILL; PEWTER | |
| ZONE 4 (FRAMED CANOPY) | | | | |
| 4 | FASCIA | WESTERN STATES METAL ROOFING | METAL FASCIA | COLOR TO MATCH DUTCH BROS DARK GRAY |
| 5 | SOFFIT | HEWN ELEMENTS | NATURAL NORTHWESTERN SPRUCE | 1X6, T&G, $\frac{1}{8}$" REVEAL |
| 6 | COLUMNS | ELDORADO STONE | CLIFFSTONE; BANFF SPRINGS | |

NOTE: PROVIDE 3"X2" SMOOTH DOWNSPOUTS AND ALL NECESSARY ADAPTORS AT AWNING AND CANOPY LOCATIONS; DOWNSPOUT COLOR TO MATCH BODY MATERIAL PER ELEVATION

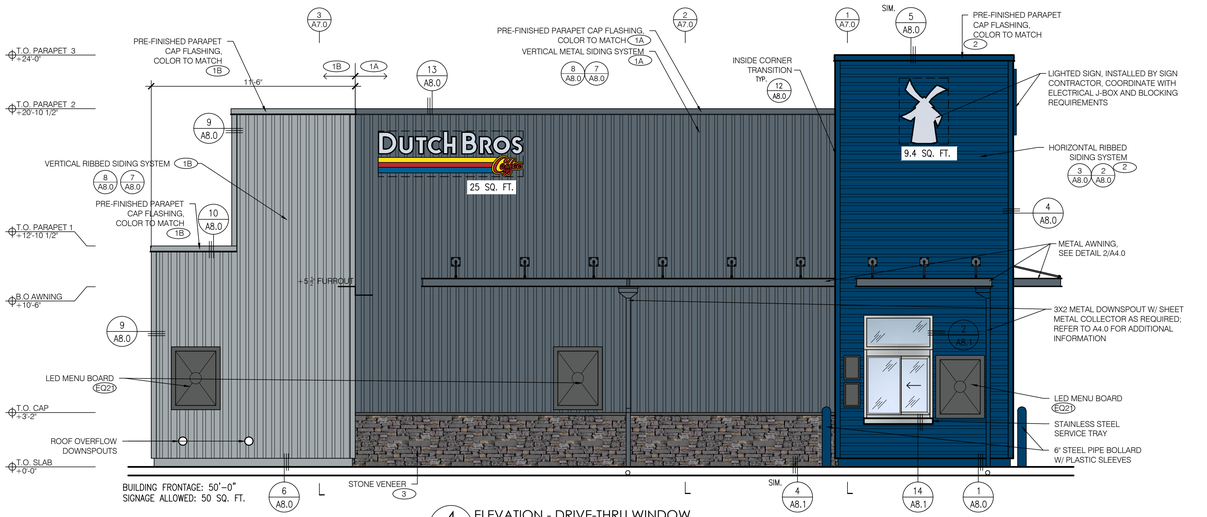


4 ELEVATION - DRIVE-THRU WINDOW

SCALE: 1/4" = 1'-0"

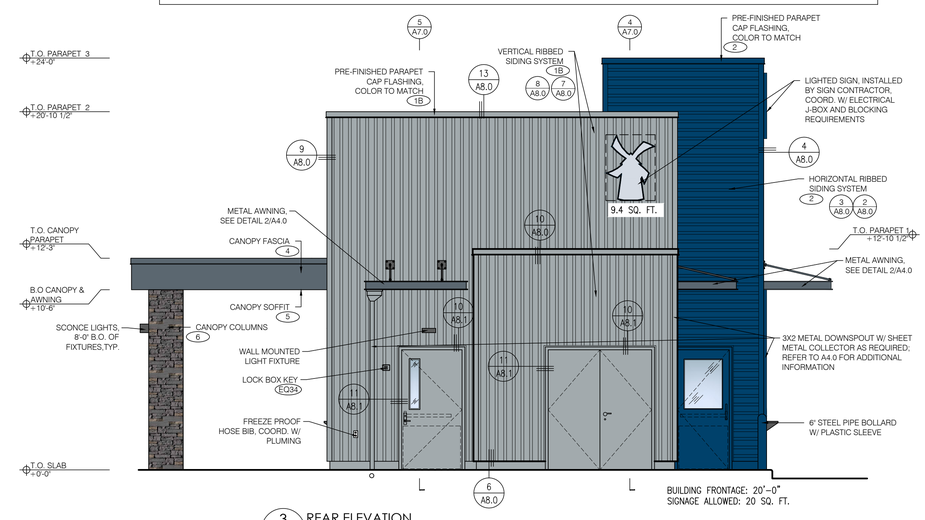


3 REAR ELEVATION

SCALE: 1/4" = 1'-0"

2 ELEVATION - WALK-UP WINDOW

SCALE: 1/4" = 1'-0"

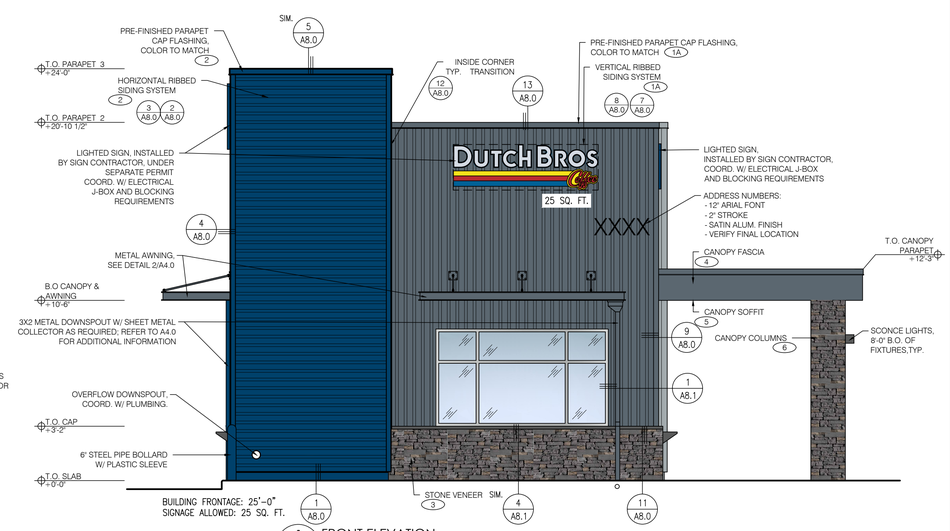


1 FRONT ELEVATION

SCALE: 1/4" = 1'-0"

ARMÉT DAVIS NEWLOVE & ASSOCIATES, AIA ARCHITECTS

1330 OLYMPIC BLVD.
SANTA MONICA, CALIFORNIA 90404
PH 310 452-5533 FAX 310 450-4742

THE USE OF THESE PLANS AND SPECIFICATIONS SHALL BE RESTRICTED TO THE ORIGINAL SITE FOR WHICH THEY WERE PREPARED AND PUBLICATION THEREOF IS EXPRESSLY LIMITED TO SUCH USE. RE-USE, REPRODUCTION OR PUBLICATION BY ANY METHOD, IN WHOLE OR IN PART, IS PROHIBITED. TITLE TO THE PLANS AND SPECIFICATIONS REMAINS WITH THE ARCHITECT WITHOUT PREJUDICE. VISUAL CONTACT WITH THESE PLANS AND SPECIFICATIONS SHALL CONSTITUTE PRIMA FACIE EVIDENCE OF THE ACCEPTANCE OF THE RESTRICTIONS.

LICENSED ARCHITECT
PAUL W. DEPPE
C-28602
RE 1-31-23
STATE OF CALIFORNIA

# Project No: CA4807

Dutch Bros Coffee - New Freestanding Store

DB2550-A1

32250 MISSION TRAIL
LAKE ELSINORE, CA 92530
APN: 365-040-024

DATE: 02/25/2022

| REV: | DATE: | DESCRIPTION: |
|---|---|---|
| | | |

SHEET NAME:

BUILDING ELEVATIONS COLOR

SHEET NUMBER:

A6.1

© 2019 DB Franchising USA, LLC

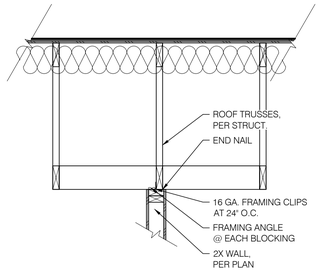


6 TYP. TOP OF WALL BRACING

SCALE: NTS

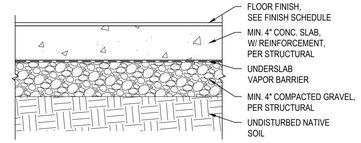


8 BLDG. CONC. SLAB

SCALE: NTS

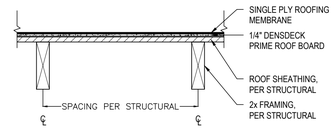


7 ROOF ASSEMBLY - JOISTS

SCALE: NTS

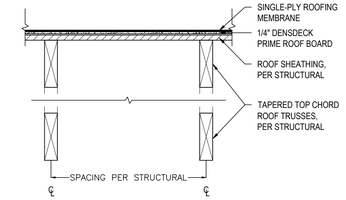


6 ROOF ASSEMBLY - TRUSSES

SCALE: NTS

## GENERAL NOTES:

1. COORDINATE WITH STRUCTURAL DRAWINGS FOR SIZES, CONNECTION DETAILS OF WOOD FRAMING, JOISTS, GIRDERS, WOOD DECKING AND OTHER STRUCTURAL COMPONENTS.
2. COORDINATE WITH STRUCTURAL DRAWINGS FOR REINFORCEMENT OF CONCRETE SLABS, FOOTINGS, FOUNDATIONS, AND WALL TYPES.
3. COORDINATE WINDOW TYPES WITH FLOOR PLANS AND FRAME TYPES. PROVIDE BITUMINOUS DAMPROOFING ON ALL EXTERIOR WALLS BELOW GRADE LEVEL AS INDICATED IN THE SPECIFICATIONS.
4. AIR BARRIER JOINTS AND SEAMS SHALL BE SEALED, INCLUDING SEALING TRANSITIONS IN PLACES AND CHANGES IN MATERIALS. THE JOINTS AND SEALS SHALL BE SECURELY INSTALLED IN OR ON THE JOINT FOR ITS ENTIRE LENGTH SO AS NOT TO DISLODGE, LOOSEN OR OTHERWISE IMPAIR ITS ABILITY TO RESIST POSITIVE AND NEGATIVE PRESSURE FROM WIND, STACK EFFECT AND MECHANICAL VENTILATION.
5. PENETRATIONS OF THE AIR BARRIER SHALL BE CAULKED, GASKETED OR OTHERWISE SEALED IN A MANNER COMPATIBLE WITH THE CONSTRUCTION MATERIALS AND LOCATION.

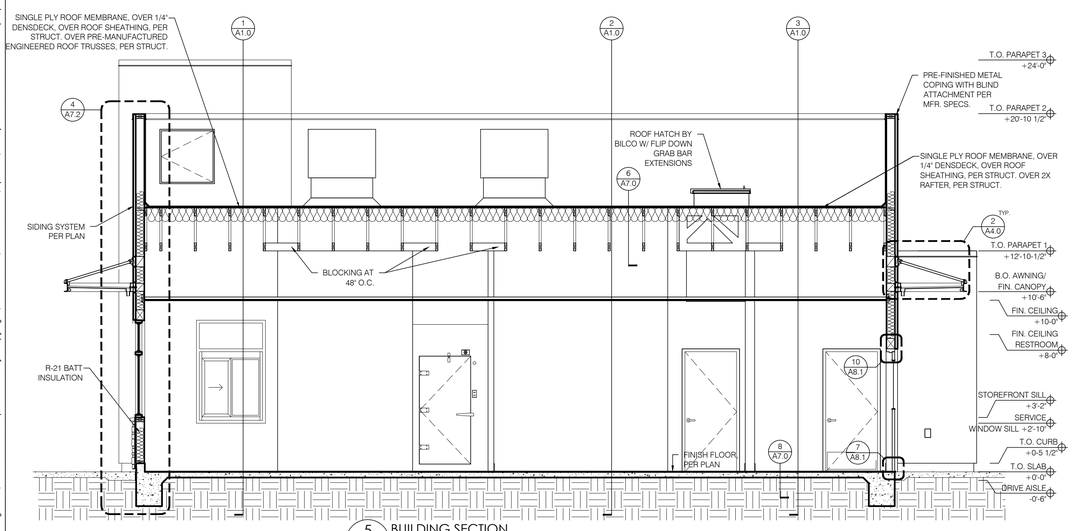


5 BUILDING SECTION

SCALE: 1/4" = 1'-0"

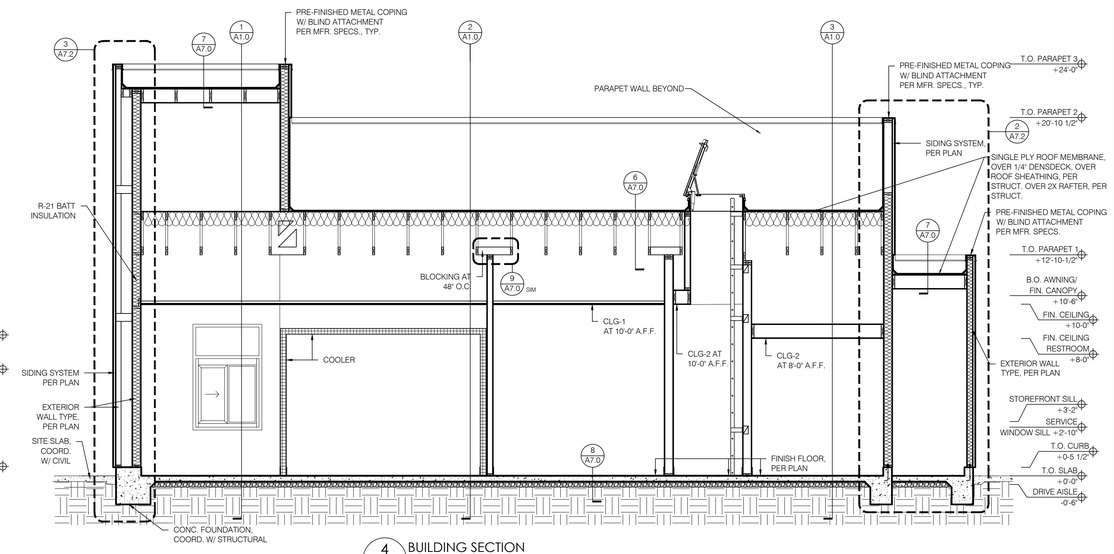


4 BUILDING SECTION

SCALE: 1/4" = 1'-0"

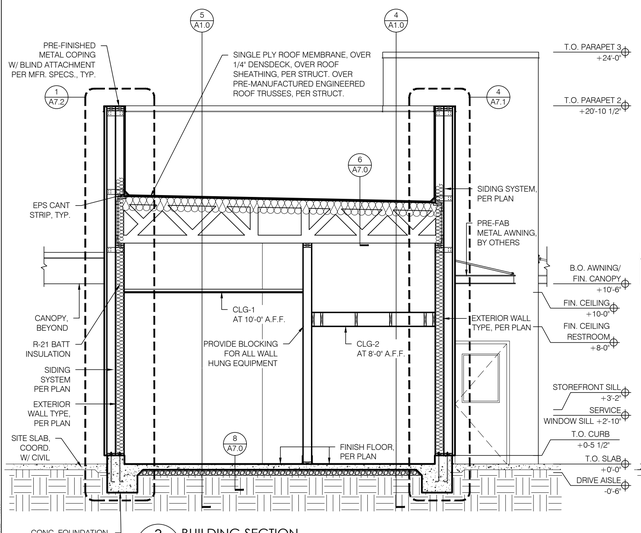


3 BUILDING SECTION

SCALE: 1/4" = 1'-0"

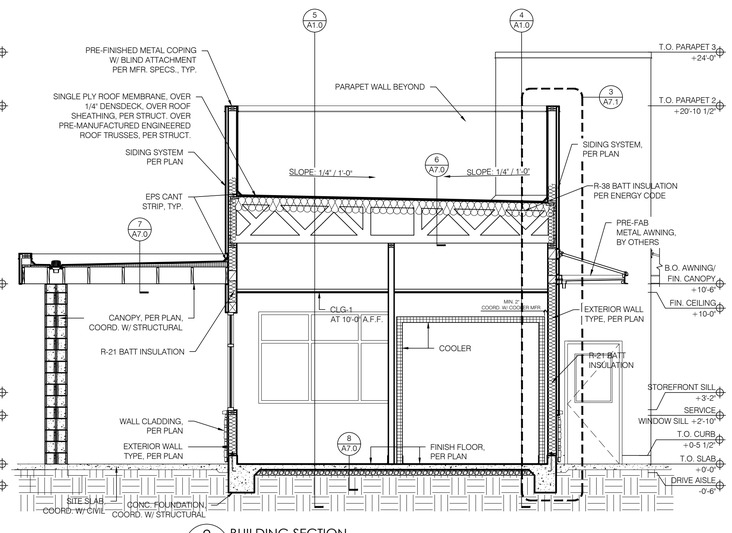


2 BUILDING SECTION

SCALE: 1/4" = 1'-0"

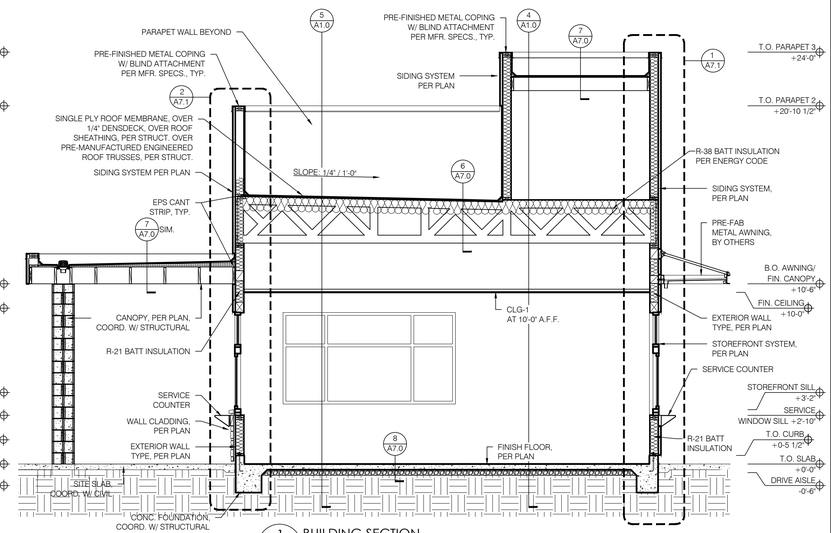


1 BUILDING SECTION

SCALE: 1/4" = 1'-0"


ARMÉT DAVIS NEWLOVE & ASSOCIATES, AIA ARCHITECTS

1330 OLYMPIC BLVD.
SANTA MONICA, CALIFORNIA 90404
PH 310 452-5533 FAX 310 450-4742



THE USE OF THESE PLANS AND SPECIFICATIONS SHALL BE RESTRICTED TO THE ORIGINAL SITE FOR WHICH THEY WERE PREPARED AND PUBLICATION THEREOF IS EXPRESSLY LIMITED TO SUCH USE. RE-USE, REPRODUCTION OR PUBLICATION BY ANY METHOD, IN WHOLE OR IN PART, IS PROHIBITED. TITLE TO THE PLANS AND SPECIFICATIONS REMAINS WITH THE ARCHITECT WITHOUT PREJUDICE. VISUAL CONTACT WITH THESE PLANS AND SPECIFICATIONS SHALL CONSTITUTE PRIMA FACIE EVIDENCE OF THE ACCEPTANCE OF THE RESTRICTIONS.


LICENSED ARCHITECT
PAUL W. DEPPE
C-28602
REN. 1-31-23
STATE OF CALIFORNIA

# Project No: CA4807

Dutch Bros Coffee - New Freestanding Store

DB2550-A1

32250 MISSION TRAIL
LAKE ELSINORE, CA 92530
APN: 365-040-024

DATE: 02/25/2022

| REV: | DATE: | DESCRIPTION: |
|---|---|---|
| | | |

SHEET NAME:

BUILDING SECTIONS

SHEET NUMBER:

A7.0


© 2019 DB Franchising USA, LLC

"The name DUTCH BROS. and all associated logos, distinctive designs, content, information, and other materials featured, displayed, contained herein, and made available by Dutch Bros., including but not limited to, the "look and feel" of the establishments and products, all text, images, colors, configurations, ~~and all designs, illustrations, photographs, and pictures~~ (collectively, the "Materials") are owned by and/or licensed by DB Franchising USA, LLC and are protected by copyright, trademark, trade dress, patent, and/or other intellectual property rights and unfair competition laws under the United States and foreign laws."

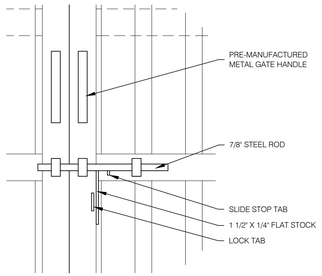


7 TRASH ENCLOSURE GATE LOCKING HANDLE

SCALE: 1-1/2" = 1'-0"

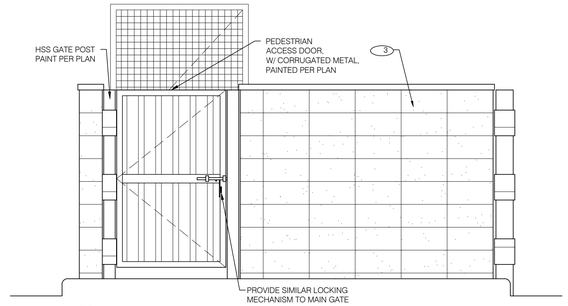


3 TRASH ENCLOSURE SIDE ELEVATION

SCALE: 1/2" = 1'-0"

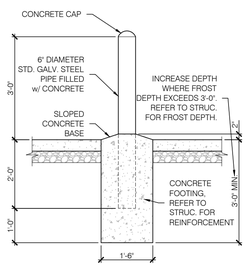


8 BOLLARD DETAIL

SCALE: 1/2" = 1'-0"

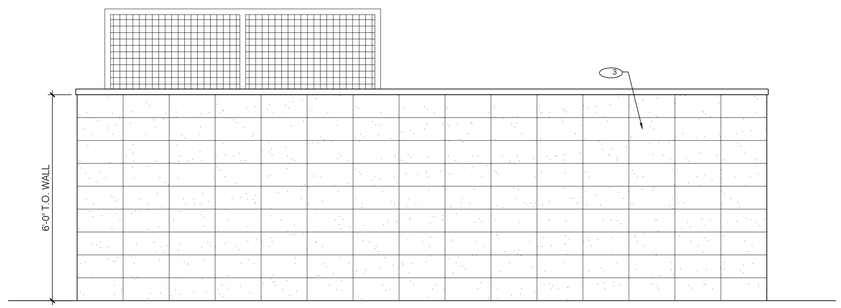


4 TRASH ENCLOSURE REAR ELEVATION

SCALE: 1/2" = 1'-0"

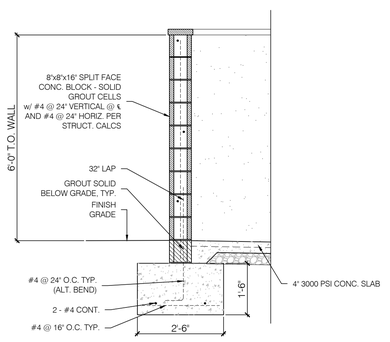


9 TRASH ENCLOSURE SECTION

SCALE: 1/2" = 1'-0"

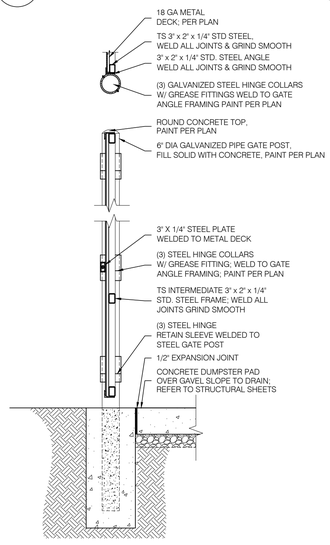


5 TRASH ENCLOSURE GATE JAMB DETAIL

SCALE: 1/2" = 1'-0"

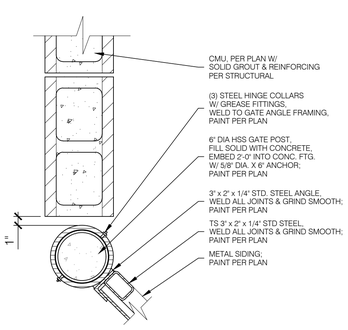


10 TRASH ENCLOSURE GATE JAMB DETAIL

SCALE: 1-1/2" = 1'-0"

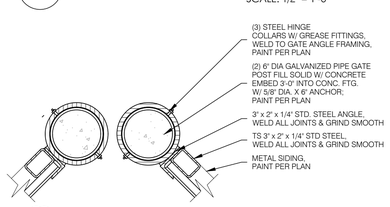


6 TRASH ENCLOSURE GATE JAMB DETAIL

SCALE: 1-1/2" = 1'-0"

| TRASH ENCLOSURE MATERIALS | | | | |
|---|---|---|---|---|
| ID | MATERIAL | MANUFACTURER | COLOR | NOTES |
| 3 | SPLIT FACE 8X8X16 | MUTUAL MATERIALS/WILLAMETTE STONE | CHARCOAL | IF INTEGRAL COLOR BLOCK IS UNAVAILABLE, BLOCK TO BE STAINED TO MATCH |
| | CMU CAP | WILLAMETTE-GRAYSTONE | CHARCOAL | 12X16X2 |
| PT-2 | PAINT | SHERWIN-WILLIAMS | 8656-11295 - BLDG DB DARK GRAY | BLDG DB DARK GRAY, GATES BODY |
| PT-3 | PAINT | SHERWIN-WILLIAMS | 8656-12045 - BLDG DB BLUE | BLDG DB BLUE, GATE FRAMES & POSTS |

## TRASH ENCLOSURE GENERAL NOTES:

1. REFER TO STRUCTURAL FOR MASONRY, CONCRETE, STRUCTURAL STEEL AND REINFORCING STEEL FOR SPECIFICATIONS.
2. PROVIDE LOCKING MECHANISM ON MAIN DOORS AND PEDESTRIAN DOOR
3. PROVIDE SITE LIGHTING AT TRASH ENCLOSURE. MIN. 5 FOOT CANDLE.
4. GATE TO BE BUILT WITH 1-1/2" SQUARE STEEL TUBING WITH ALL JOINTS FULLY WELDED TOGETHER AND 1 CROSS MEMBER PER GATE. FRAME TO BE PRIMED AND PAINTED BLACK IN COLOR.
5. ALL CONCRETE TO BE MIN. 3000 PSI IN 28 DAYS.
6. REFER TO STRUCTURAL DRAWINGS FOR SPECIFICATIONS (GENERAL NOTES) AND TYPICAL DETAILS FOR MASONRY, CONCRETE, STRUCTURAL STEEL AND REINFORCING STEEL.

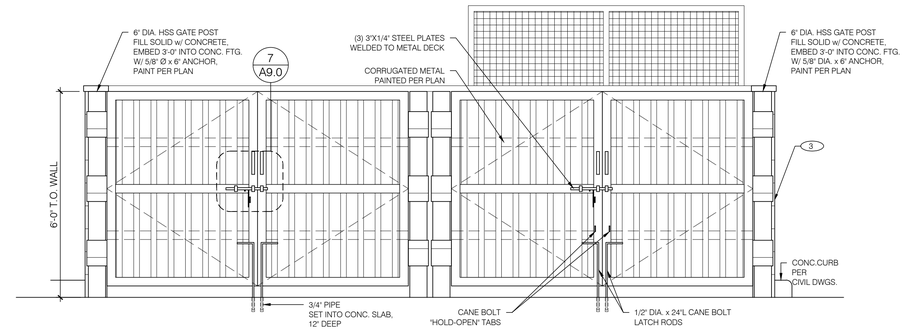


2 TRASH ENCLOSURE FRONT ELEVATION

SCALE: 1/2" = 1'-0"

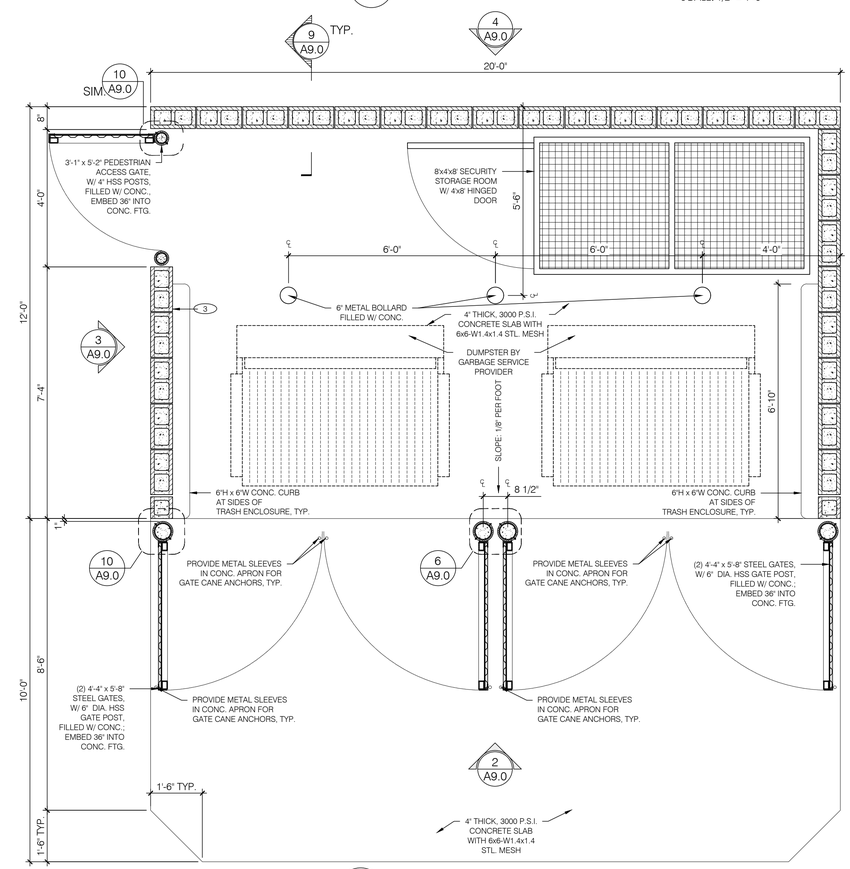


1 TRASH ENCLOSURE PLAN

SCALE: 1/2" = 1'-0"


ARMÉT DAVIS NEWLOVE & ASSOCIATES, AIA ARCHITECTS

1330 OLYMPIC BLVD.
SANTA MONICA, CALIFORNIA 90404
PH 310 452-5533 FAX 310 450-4742


LICENSED ARCHITECT PAUL W. DEPPE C-28602 RE 1-31-23 STATE OF CALIFORNIA

# Project No: CA4807

Dutch Bros Coffee - New Freestanding Store

DB2550-A1

32250 MISSION TRAIL
LAKE ELSINORE, CA 92530
APN: 365-040-024

| REV: | DATE: | DESCRIPTION: |
|---|---|---|
| | | |

DATE: 07/16/2021

SHEET NAME:

TRASH ENCLOSURE PLAN/ ELEVATIONS

SHEET NUMBER:

A9.0


© 2019 DB Franchising USA, LLC

"The name DUTCH BROS, and all associated logos, distinctive designs, content, information, and other materials featured, displayed, contained herein, and made available by Dutch Bros., including but not limited to, the "look and feel" of the establishments and products, all text, images, colors, configurations, [illegible] by copyright, trademark, trade dress, patent, and/or other intellectual property rights and unfair competition laws under the United States and foreign laws."

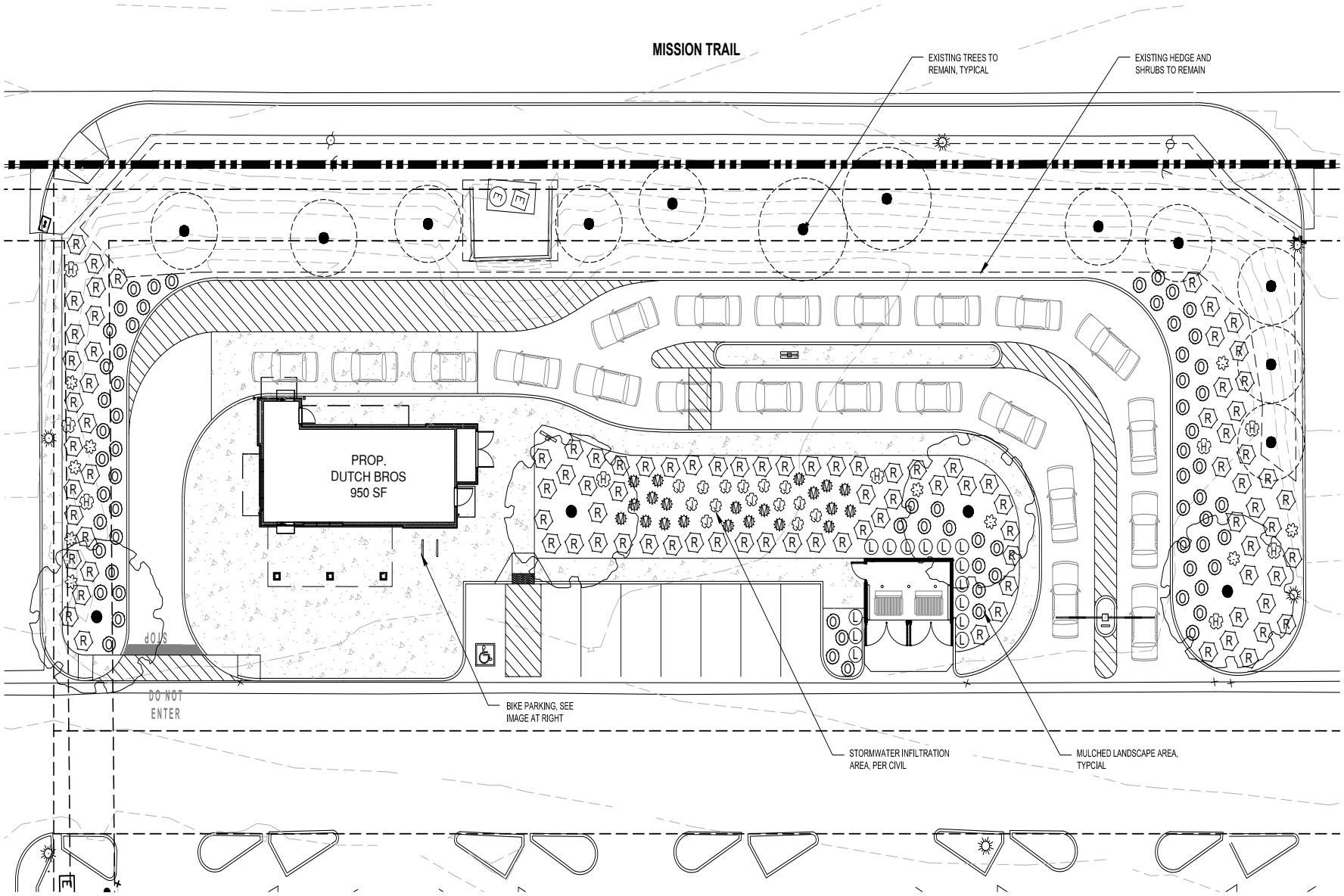


BIKE PARKING

TWO ( 2) FORMS AND SURFACES
- TRIO BIKE RACK
ALUMINUM COLOR
INSTALL PER MANUFACTURER

NOTES:
SEE SHEET L1.01 FOR PLANTING SCHEDULE, NOTES AND DETAILS

SEE CIVIL PLANS FOR REQUIRED CURBING AROUND LANDSCAPE AREAS, TYP

GRAPHIC SCALE

10 0 5 10 20 40

( In Feet )
1 inch = 10 feet

WES AROLA LANDSCAPE ARCHITECTURE
WA.LANDSCAPEARCHITECTURE@GMAIL 831/ 247 9936

LICENSED LANDSCAPE ARCHITECT
WESLEY AROLA
STATE OF CALIFORNIA

# DUTCH BROS
32250 MISSION TRAIL, LAKE ELSINORE, CA
LANDSCAPE PLANS

| # | ITEM | DATE |
|---|---|---|
| | | |

DATE
08.20.2021

LANDSCAPE PLAN

L-1.00

## PLANTING NOTES

**CONTRACTOR SHALL SUBMIT LABELED PHOTOS OF ALL PLANT MATERIAL, TREES AND GROUNDCOVERS. PHOTOS SHALL BE OF THE SPECIFIED CONTAINER SIZE. PHOTOS SHALL BE SUBMITTED AS A COMPLETE SUBMITTAL PACKAGE FOR REVIEW AND APPROVAL. INCLUDE PHOTOS OF ANY SUBSTITUTES, CLEARLY LABELED.**

ALL PLANTED AREAS SHALL BE CONTINUOUSLY MAINTAINED IN A HEALTHY, GROWING CONDITION, SHALL RECEIVE REGULAR PRUNING, FERTILIZING, MOWING, AND TRIMMING, AND SHALL BE KEPT FREE OF WEEDS AND DEBRIS BY THE OWNER OR PERSON IN POSSESSION OF SUCH AREAS. ANY DAMAGED, DEAD OR DECAYING PLANT MATERIAL SHALL BE REPLACED WITHIN THIRTY (30) DAYS FROM THE DATE OF DAMAGE.

CONTRACTOR SHALL PROVIDE ALL LABOR, MATERIALS, AND EQUIPMENT NECESSARY TO FURNISH AND INSTALL PLANT MATERIAL AS SHOWN ON THE DRAWINGS AND AS DESCRIBED IN THE SPECIFICATIONS.

PLANT SCHEDULE ON THE DRAWINGS SHALL BE USED AS A GUIDE ONLY. CONTRACTOR SHALL TAKEOFF AND VERIFY SIZES AND QUANTITIES BY PLAN CHECK. NOTIFY PROJECT LANDSCAPE ARCHITECT OF ANY MAJOR DISCREPANCIES.

UNLESS DESIGNATED ON THE DRAWINGS OTHERWISE, ALL STRUCTURAL AND HARDSCAPE IMPROVEMENTS SHALL BE CONSTRUCTED AND FINISHED AHEAD OF PLANTING.

ADJUST PLANT MATERIAL AS NECESSARY AROUND UTILITY LOCATIONS. NOTIFY LANDSCAPE ARCHITECT OF ANY MAJOR CONFLICTS OR NECESSARY ADJUSTMENTS.

SOILS SHALL BE AMENDED PER A SOILS FERTILITY ANALYSIS AS EXPLAINED IN THE COMPLIANCE WITH MWELO NOTES ON THE IRRIGATION PLAN. SOIL AMENDMENTS AND PREPARATION SHALL CONFORM TO STATE AB1881 AND LOCAL WATER EFFICIENT LANDSCAPE ORDINANCES.

ALL WORK ON THE IRRIGATION SYSTEM INCLUDING OPERATIONAL TESTS, AND BACKFILLING OF TRENCHES SHALL BE COMPLETED AHEAD OF PLANTING.

LOCATIONS OF ALL PLANT MATERIAL SHALL BE REVIEWED ON SITE BY THE OWNER'S AUTHORIZED REPRESENTATIVE PRIOR TO PLANTING. THE REPRESENTATIVE RESERVES THE RIGHT TO MAKE ANY ADJUSTMENTS, SUBSTITUTIONS, ADDITIONS, AND DELETIONS TO THE PLANT LAYOUT AS WORK PROGRESSES.

ALL GROUNDCOVER SHALL BE TRIANGULARLY SPACED, UNLESS OTHERWISE NOTED.

TREES SHALL BE INSTALLED NO CLOSER THAN TEN (10) FEET FROM UTILITIES.

TREES TO BE PLANTED WITHIN FIVE (5) FEET OF HARDSCAPE OR STRUCTURES SHALL BE INSTALLED WITH A ROOT BARRIER.

ALL PLANTING AREAS TO RECEIVE 3" THICK MIN. LAYER OF MULCH.

SEE CIVIL PLANS FOR REQUIRED CURBING AROUND LANDSCAPE AREAS, TYP

## PLANTING SCHEDULE

| TREES | QTY | BOTANICAL NAME | COMMON NAME | SIZE |
|---|---|---|---|---|
| • | 4 | PINUS ELDARICA | AFGHAN PINE | 24" BOX |

| SHRUBS | QTY | BOTANICAL NAME | COMMON NAME | SIZE |
|---|---|---|---|---|
| | 10 | DASYLIRION WHEELERI | GREY DESERT SPOON | 5 GAL. |
| H | 9 | HESPERALOE PARVIFLORA | RED YUCCA | 5 GAL. |
| | 14 | JUNCUS PATENS | CALIFORNIA GRAY RUSH | 1 GAL. |
| L | 14 | LIGUSTRUM JAPONICUM 'TEXANUM' | TEXAS JAPANESE PRIVET | 5 GAL. |
| M | 21 | MUHLENBERGIA DUBIA | PINE MUHLY | 1 GAL. |
| O | 70 | OLEA EUROPAEA 'LITTLE OLLIE' TM | LITTLE OLLIE OLIVE | 5 GAL. |
| R | 100 | ROSMARINUS OFFICINALIS 'HUNTINGTON CARPET' | HUNTINGTON CARPET ROSEMARY | 1 GAL. |

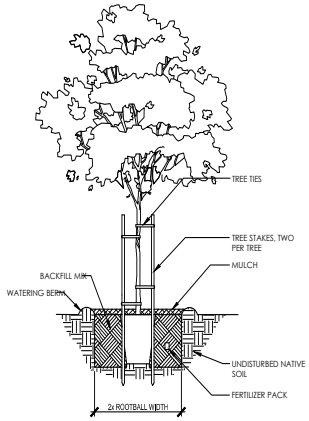


2 TREE PLANTING
1/2" = 1'-0" 329343-30

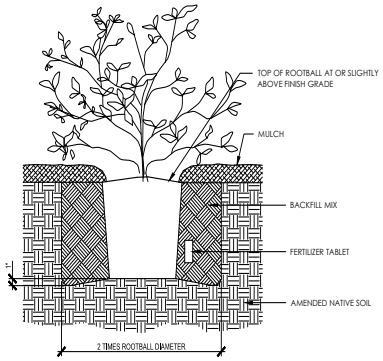


1 SHRUB PLANTING
1 1/2" = 1'-0" 329333-03


WES AROLA LANDSCAPE ARCHITECTURE
WA.LANDSCAPEARCHITECTURE@GMAIL 831/ 247 9936


LICENSED LANDSCAPE ARCHITECT
WESLEY AROLA
STATE OF CALIFORNIA
Renewal Date
Date

DUTCH BROS
32250 MISSION TRAIL, LAKE ELSINORE, CA
LANDSCAPE PLANS

| # | ITEM | DATE |
|---|---|---|
| | | |

DATE
08.20.2021

PLANTING SCHEDULE NOTES AND DETAILS

L-1.01

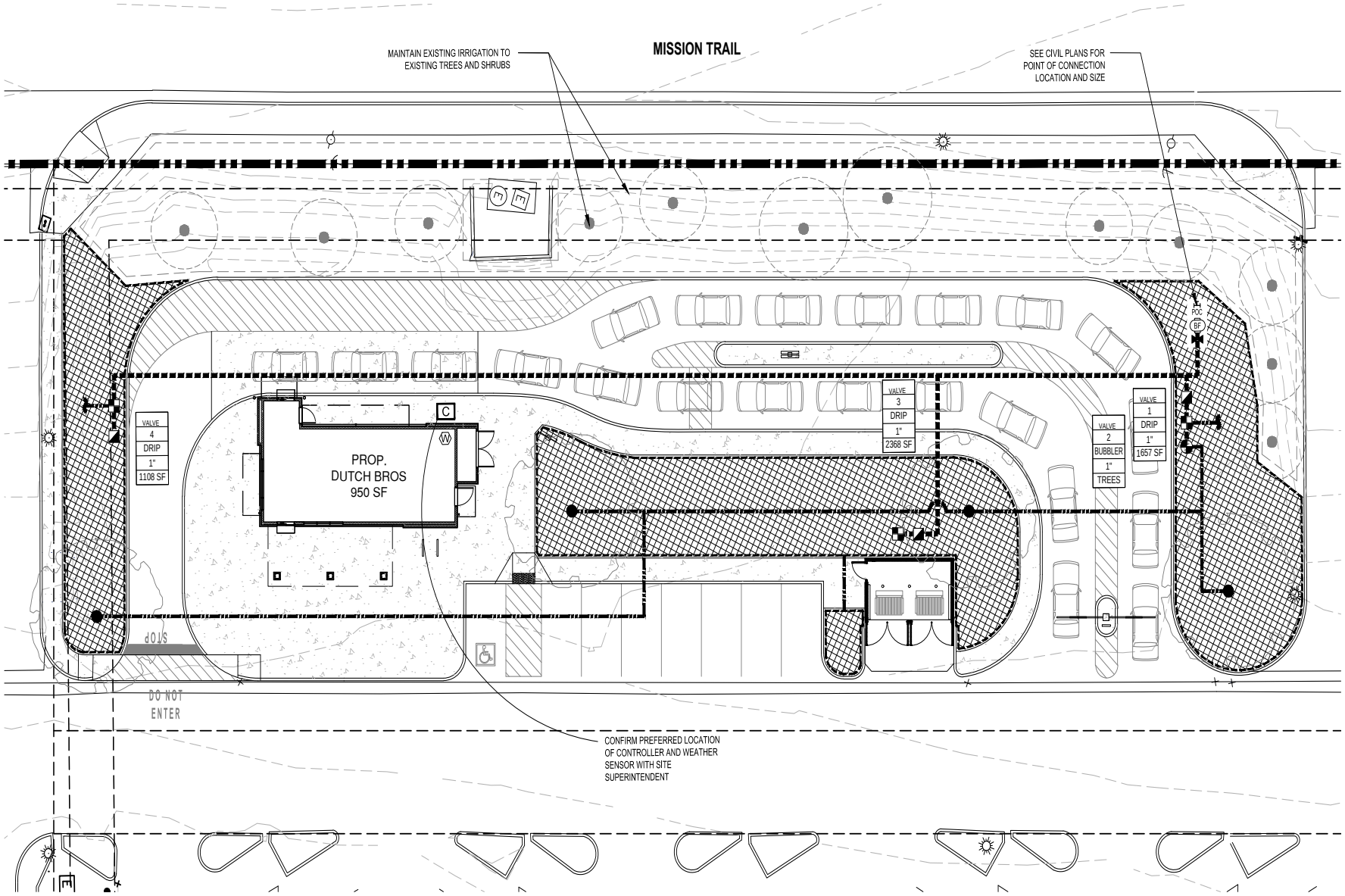


NOTES:
SEE SHEET L2.01 FOR IRRIGATION SCHEDULE, NOTES AND DETAILS AND MWELO CALCULATIONS

IRRIGATION EQUIPMENT AND PIPING MAY BE SHOWN IN PAVING FOR GRAPHIC CLARITY. LOCATE IN LANDSCAPE AREAS

GRAPHIC SCALE
10 0 5 10 20 40
( In Feet )
1 inch = 10 feet

WES AROLA LANDSCAPE ARCHITECTURE
WA.LANDSCAPEARCHITECTURE@GMAIL 831/ 247 9936

LICENSED LANDSCAPE ARCHITECT
WESLEY AROLA
No. 5178
Renewal Date
Date
STATE OF CALIFORNIA

# DUTCH BROS
## 32250 MISSION TRAIL, LAKE ELSINORE, CA
## LANDSCAPE PLANS

| # | ITEM | DATE |
|---|---|---|
| | | |

DATE
08.20.2021

IRRIGATION PLAN

L-2.00

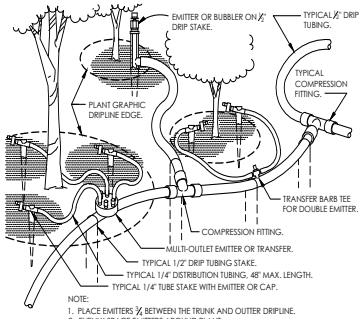


NOTE:
1. PLACE EMITTERS ½ BETWEEN THE TRUNK AND OUTTER DRIPLINE.
2. EVENLY SPACE EMITTERS AROUND PLANT.
3. STAKE THE DRIP TUBING AT EACH TEE, ELL, COUPLER, AT EACH EMITTER OR TRANSFER, AND AT 6'-0" MAX O.C.

## 4 TYPICAL DRIP TUBING

1 1/2" = 1'-0" FX-IR-FX-DRIP-01

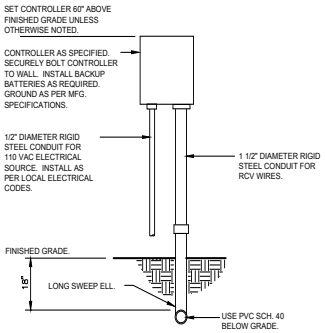


## 3 WALL MOUNT CONTROLLER

1" = 1'-0" FX-IR-FX-CONT-07

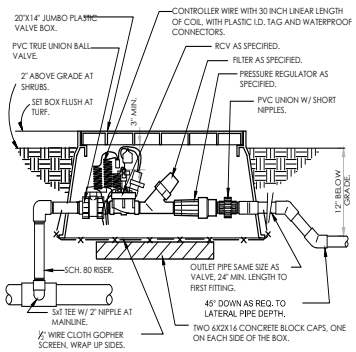


## 2 1" DRIP VALVE/FILTER/REGULATOR

1 1/2" = 1'-0" FX-IR-FX-DRIP-12

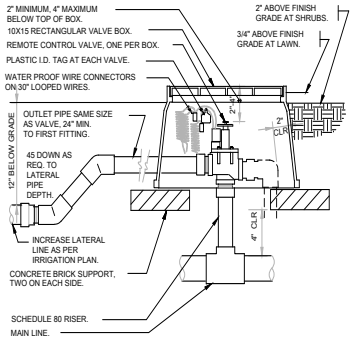


## 1 ELECTRIC REMOTE CONTROL VALVE

1 1/2" = 1'-0" FX-IR-FX-RCV-05

## IRRIGATION NOTES

1. IRRIGATION PLAN IS DIAGRAMMATIC. FINAL LOCATION OF PIPING WILL BE DETERMINED AT THE TIME OF INSTALLATION. MAINLINE AND LATERALS SHALL BE PLACED IN THE SAME TRENCH WHEN POSSIBLE.
2. ALL EQUIPMENT REQUIRED BUT NOT SPECIFIED ON THE DRAWING, TO COMPLETE THE WORK, SHALL BE PROVIDED BY THE IRRIGATION CONTRACTOR.
3. INSTALL ALL EQUIPMENT IN ACCORDANCE WITH MANUFACTURER'S INSTRUCTIONS AND/OR SPECIFICATIONS.
4. ALL PIPING RUNNING UNDER HARDSCAPE/WALLS SHALL BE SLEEVED. MINIMIZE SLEEVING AS MUCH AS POSSIBLE BY LOCATING LATERALS AND MAINLINE IN PLANTING AREAS.
5. FOR DRIP IRRIGATION AREAS, CONTRACTOR SHALL INSTALL AIR RELIEF VALVES, OPERATION INDICATORS, AND FLUSH VALVES IN ACCORDANCE WITH MANUFACTURER'S RECOMMENDATIONS.
6. CONTRACTOR SHALL COORDINATE POWER TO CONTROLLERS AND DEDICATE ONE (1) 20 AMP BREAKER FOR EACH CONTROLLER. THE AUTHORIZED REPRESENTATIVE SHALL REVIEW CONTROLLER LOCATIONS PRIOR TO INSTALLATION. 120 VOLT SERVICE AND HOOK-UP TO THE CONTROLLER SHALL BE COMPLETED BY A LICENSED ELECTRICAL CONTRACTOR. THIS COST IS TO BE A PART OF THE LANDSCAPE CONTRACTOR'S BID.
7. CONTRACTOR SHALL FAMILIARIZE HIMSELF WITH THE PLANS AND SITE CONDITIONS PRIOR TO BEGINNING WORK. SHOULD CONFLICTING INFORMATION BE FOUND ON THE PLANS, THE CONTRACTOR SHALL NOTIFY THE PROJECT LANDSCAPE ARCHITECT BEFORE PROCEEDING WITH THE WORK IN QUESTION.
8. DO NOT WILLFULLY INSTALL THE IRRIGATION SYSTEM AS SHOWN ON THE DRAWINGS WHEN IT IS OBVIOUS IN THE FIELD THAT OBSTRUCTIONS, GRADE DIFFERENCES OR DIFFERENCES IN THE AREA DIMENSIONS EXIST THAT MIGHT NOT HAVE BEEN CONSIDERED IN THE ENGINEERING. SUCH OBSTRUCTIONS OR DIFFERENCES SHOULD BE BROUGHT TO THE ATTENTION OF THE LANDSCAPE ARCHITECT. IN THE EVENT THIS NOTIFICATION IS NOT PERFORMED, THE CONTRACTOR SHALL ASSUME FULL RESPONSIBILITY FOR ANY REVISIONS NECESSARY AT NO EXPENSE TO THE OWNER.
9. CONTRACTOR SHALL SLEEVE UNDER PAVING PER PLANS AND SPECIFICATIONS. ALL SLEEVES UNDER PAVING SHALL RECEIVE IDENTIFYING MARK ON TOP OF CONCRETE. EXTEND ALL SLEEVES 18" BEYOND EDGE OF PAVING.
10. SPLICING OF 24 VOLT WIRES WILL NOT BE PERMITTED EXCEPT IN VALVE BOXES. LEAVE A 24" COIL OF EXCESS WIRE AT EACH SPLICE. LABEL ALL WIRES W/ WATERPROOF MARKERS AT ALL SPLICES AND VALVE MANIFOLDS.
11. CONTRACTOR SHALL BE RESPONSIBLE FOR THE INSTALLATION OF ALL MATERIAL APPEARING ON PLAN.
12. ALL EXISTING UTILITIES, WATER LINES AND FIRE HYDRANTS SHALL REMAIN CONNECTED AND N FULL CONTINUOUS OPERATION DURING AND FOLLOWING ALL CONTRACT WORK.
13. CONTRACTOR SHALL NOT INSTALL ANY PLANTING UNTIL THE FOLLOWING ARE COMPLETED: 1. THE IRRIGATION SYSTEM SHALL BE FULLY OPERATIONAL. 2. HYDROSTATIC PRESSURE TESTS SHALL BE PERFORMED ON MAIN AND LATERAL LINES. 3. ALL ZONES SHALL PASS A COVERAGE TEST. 4. CONTROLLERS SHALL BE FULLY OPERATIONAL.

## COMPLIANCE WITH MWELO

1. PROJECT INFORMATION - SEE COVER PAGE OF THIS DRAWING SET FOR ALL INFORMATION INCLUDING, DATE, PROJECT APPLICANT AND OWNER, AND ADDRESS.
2. TOTAL LANDSCAPE AREA: 5,733 SF
   SHRUBS GROUNDCOVER AND TREES - 5,733 SF
   TURF - 0 SF
3. PROJECT TYPE - NEW CONSTRUCTION
4. WATER SUPPLY - POTABLE
5. CHECKLIST OF ALL DOCUMENTS IN LANDSCAPE DOCUMENT PACKAGE:
   X LANDSCAPE DESIGN PLAN - INCLUDED IN THESE LANDSCAPE DRAWINGS
   X IRRIGATION DESIGN PLAN - INCLUDED IN THESE LANDSCAPE DRAWINGS
   X GRADING DESIGN PLAN - PER CIVIL SHEETS
6. SEE BELOW FOR WATER EFFICIENT LANDSCAPE WORKSHEET
7. SEE BELOW FOR WATER BUDGET CALCULATIONS (MAWA) AND (ETWU)
8. I AGREE TO COMPLY WITH THE REQUIREMENTS OF THE MWELO

WESLEY AROLA - CA RLA #5958

CONTRACTOR IS RESPONSIBLE FOR THE FOLLOWING ITEMS:

1. SOILS MANAGEMENT REPORT
   Submit soil samples to a laboratory for analysis and recommendations. Soil sampling shall be conducted in accordance with laboratory protocol, including protocols regarding adequate sampling depth for the intended plants.
   The soil analysis may include: soil texture; infiltration rate determined by laboratory test or soil texture infiltration rate table; pH; total soluble salts; sodium; percent organic matter; and recommendations.
   The soil analysis report shall be submitted to the local agency as part of the Certificate of Completion.
   The soil analysis report shall be made available, in a timely manner, to the professionals preparing the landscape design plans and irrigation design plans to make any necessary adjustments to the design
   The project applicant, or his/her designee, shall submit documentation verifying implementation of soil analysis report recommendations to the local agency with Certificate of Completion
2. CERTIFICATE OF COMPLETION - SEE APPENDIX C OF THE MWELO
3. IRRIGATION SCHEDULING - PER SECTION 492.10 OF THE MWELO
4. SCHEDULE OF LANDSCAPE AND IRRIGATION MAINTENANCE - PER SECTION 492.11 OF THE MWELO
5. IRRIGATION AUDIT REPORT - PER SECTION 492.12 OF THE MWELO

## IRRIGATION SCHEDULE

| SYMBOL | MANUFACTURER/MODEL/DESCRIPTION |
|---|---|
| | TORO DZK-700-1<br>DRIP CONTROL VALVE KIT. WITH 1"<br>IRRITROL 700 ULTRAFLOW INLINE VALVE, TORO Y-FILTER,<br>PRESSURE REGULATOR AND FITTINGS. |
| | AREA TO RECEIVE DRIP EMITTERS AT EACH PLANT :<br>PROVIDE (1) 2 GAL EMITTER / 1 GALLON<br>PROVIDE (2) 2 GAL EMITTER / 5 GALLON<br>PROVIDE (3) 2 GAL EMITTER / 15 GALLON |
| TREES | TREE BUBBLER<br>TORO FB-50-PC<br>2 BUBBLERS PER TREE |
| | IRRITROL 100P1-S GLOBE PRESSURE REDUCING STEM<br>ELECTRIC REMOTE CONTROL VALVE, 1", GLOBE BODY<br>CONFIGURATION, FLOW CONTROL |
| | MATCO-NORCA 770T<br>PVC WHITE BALL VALVE FOR SCH 40 AND SCH 80 PIPE,<br>THREADED ENDS COMPLY WITH ASTM F1498, WITH "T"<br>HANDLE, SAME SIZE AS MAINLINE. |
| | TYPICAL QUICK COUPLER IN BOX |
| BF | FEBCO 825Y 3/4"<br>REDUCED PRESSURE BACKFLOW PREVENTER WITH LOCKING BLANKET |
| C | IRRITROL TC-6EX-R<br>HYBRID CONTROLLER, 6- STATION, OUTDOOR MODEL,<br>WITH SS LOCKING CABINET. CLIMATE LOGIC COMPATIBLE,<br>AND REMOTE-READY. |
| | IRRITROL RS1000 WIRELESS RAIN SENSOR |
| POC | POINT OF CONNECTION - CONFIRM LOCATION AND SIZE ON CIVIL PLANS |
| | IRRIGATION MAINLINE: PVC SCHEDULE 40 1.5" |
| | IRRIGATION LATERAL LINE: PVC SCHEDULE 40<br>PVC SCHEDULE 40 IRRIGATION PIPE. |

VALVE TAG

| VALVE | |
|---|---|
| X | STATION # |
| - | TYPE |
| X | SIZE |
| X | HYDROZONE AREA |

LATERAL SIZING
MINIMUM LATERAL SIZE SHALL BE 3/4". SIZING OF LATERAL PIPE SHALL BE AS FOLLOWS, UNLESS OTHERWISE NOTED:

| | |
|---|---|
| 3/4" | 0-9 GPM |
| 1" | 9.1-18 GPM |
| 1 1/4" | 18.1-30 GPM |
| 1 1/2" | 31.1-40 GPM |
| 2" | 40.1-60 GPM |

## IRRIGATION CALCULATIONS

### MAXIMUM APPLIED WATER ALLOWANCE (MAWA)

TERMINOLOGY

| | | | |
|---|---|---|---|
| MAWA | = | Maximum Applied Water Allowance |
| ET0 | = | Reference Evapotranspiration |
| 0.62 | = | Conversion factor (to gallons per square foot) |
| ETAF | = | 0.55 for Residential Projects |
| ETAF | = | 0.45 for Non-Residential Projects |
| LA | = | Landscaped Area |
| ETAF for SLA | = | Additional ET Adjustment Factor for SLA (1.0 - 0.7 = 0.3) |
| SLA | = | Portion of Landscape Area identified as Special Landscape Area |
| ETAF | = | ET Adjustment Factor (ETAF) |

Project Type = Non Residential
Calculate for MAWA

| | ET0 | x | ETAF | x | AREA (sf) | x | CONVERSION = | MAWA |
|---|---|---|---|---|---|---|---|---|
| MAWA (LA) | 49.7 | X | 0.45 | X | 5,733 | X | 0.62 = | 79,495 |
| MAWA (SLA) | 49.7 | X | 0.9 | X | 0 | X | 0.62 = | 0 |
| | | | | | | | MAWA (Gallons/Year) = | 79,495 |
| | | | | | | | ETWU (Gallons/ Year)= | 41,838 |

### ESTIMATED TOTAL WATER USE (ETWU)

TERMINOLOGY

| | | |
|---|---|---|
| ETWU | = | Estimated Total Water Usage |
| ET0 | = | Reference Evapotranspiration |
| 0.62 | = | Conversion factor (to gallons per square foot) |
| PF | = | Plant Factor from WUCOLS |
| HA | = | Hydrozone Area |
| IE | = | Irrigation Efficiency |
| SLA | = | Portion of Landscape Area identified as Special Landscape Area |

ETWU = ET0 x 0.62 (PFxHA) / IE + SLA

| Hydrozone | Irrigation Method | Plant Water Use Type | Ref ET | Conversion | PF | HA | Numerator | IE | Denominator + SLA | ETWU |
|---|---|---|---|---|---|---|---|---|---|---|
| 1 | AREA FOR DRIP EMITTERS | L | 49.7 | 0.62 | 0.2 | 1657 | 10212 | 0.85 | | 12,014 |
| 2 | BUBBLER | L | 49.7 | 0.62 | 0.2 | 600 | 3698 | 0.8 | | 4,622 |
| 3 | AREA FOR DRIP EMITTERS | L | 49.7 | 0.62 | 0.2 | 2368 | 14594 | 0.85 | | 17,169 |
| 4 | AREA FOR DRIP EMITTERS | L | 49.7 | 0.62 | 0.2 | 1108 | 6828 | 0.85 | | 8,033 |
| | | | | | | | | | Total ETWU | 41,838 |


WES AROLA LANDSCAPE ARCHITECTURE
WA.LANDSCAPEARCHITECTURE@GMAIL 831/ 247 9938


LICENSED LANDSCAPE ARCHITECT
WESLEY AROLA
5958
Renewal Date
Date
STATE OF CALIFORNIA

# DUTCH BROS
32250 MISSION TRAIL, LAKE ELSINORE, CA
LANDSCAPE PLANS

| # | ITEM | DATE |
|---|---|---|
| | | |

DATE
08.20.2021

IRRIGATION SCHEDULE NOTES AND DETAILS

L-2.01